FANTEK®
INDUSTRIAL, S.L.

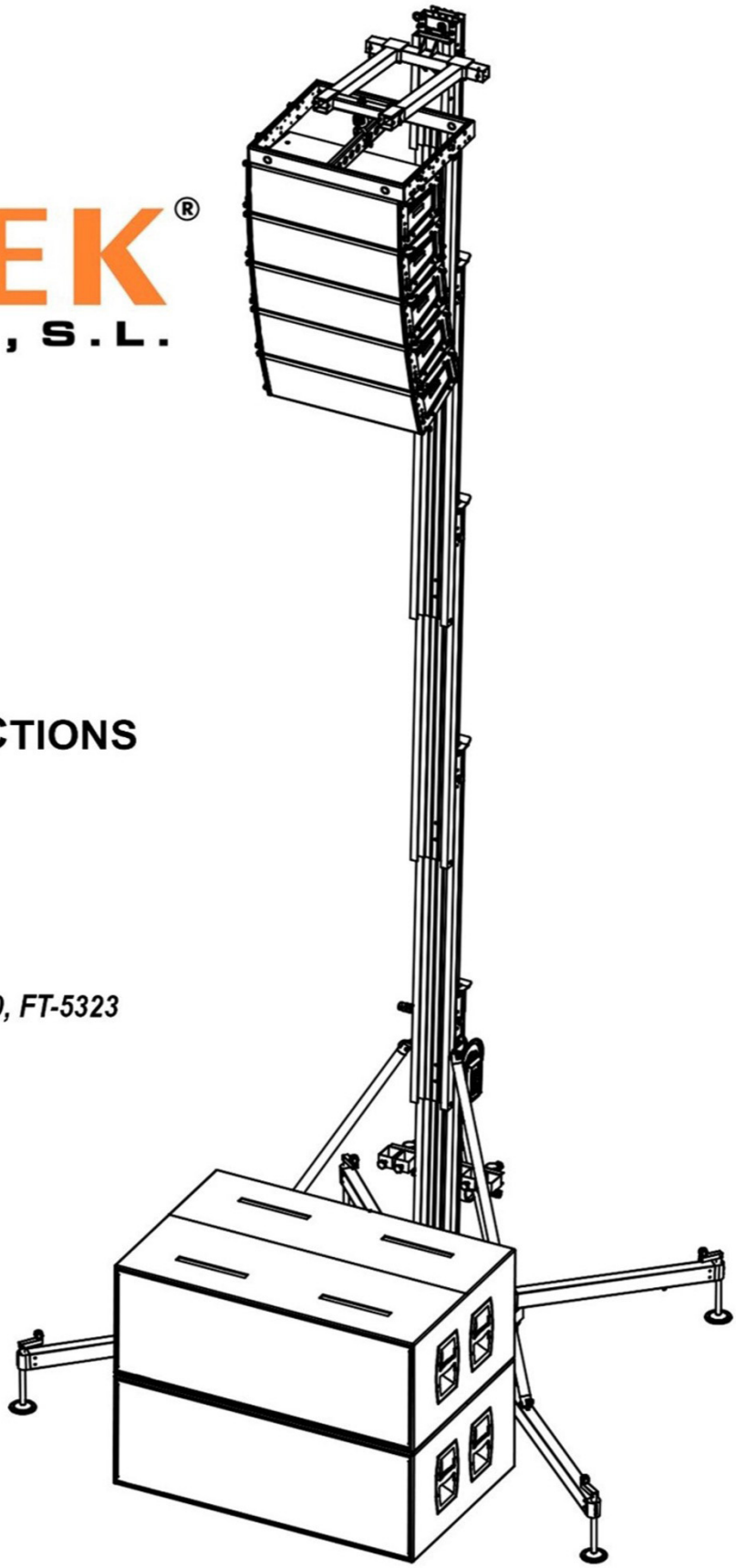

LIFTING SYSTEMS

OPERATING INSTRUCTIONS

FOR MODELS:

FT-6860, FT-7045, FT-6033, FT-6520, FT-5323

DYNAMIC OVERLAP

V. 5.0

IMPORTANT

Read and carefully understand all points and aspects of this manual. Loads irresponsibly can cause lethal accidents. Installation of lifting systems and proper use are only responsibility of the user.

It is recommended to attach this manual with the tower system used.

In case of doubt, consult the technical department of FANTEK Industrial.

CONTENT

CONTACT

Internet: http://www.fantek.net/

e-mail: support@fantek.net

ILLUSTRATION INDEX

WARNING ICONS

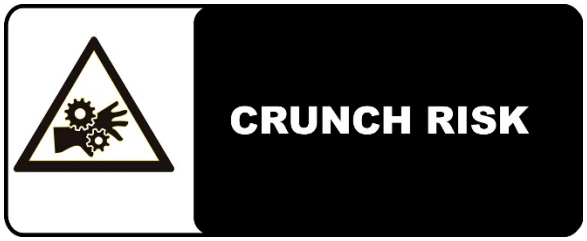

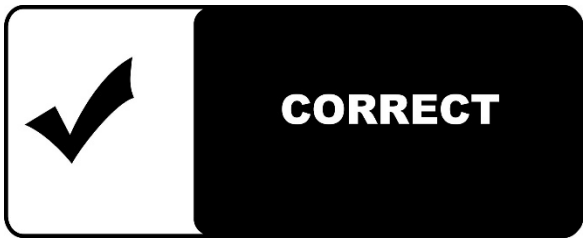

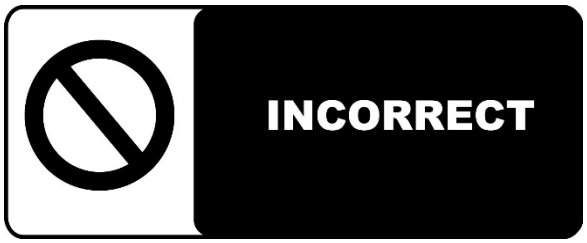

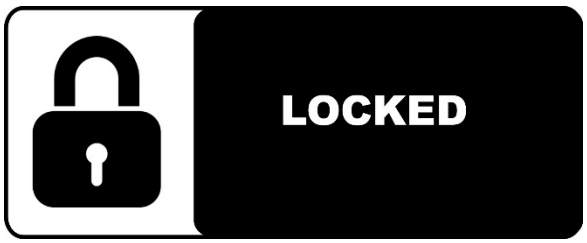

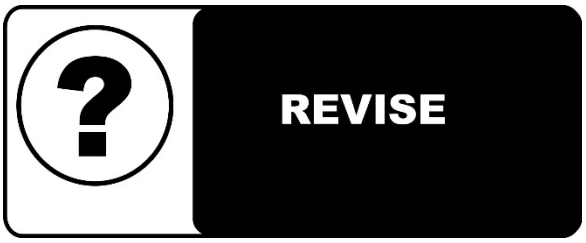

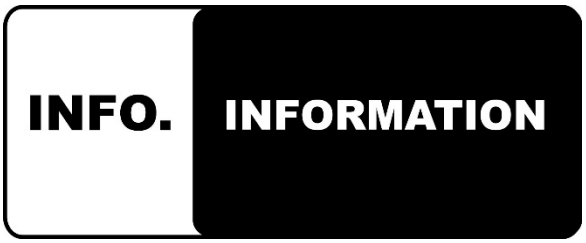

RULES AND SAFETY USE

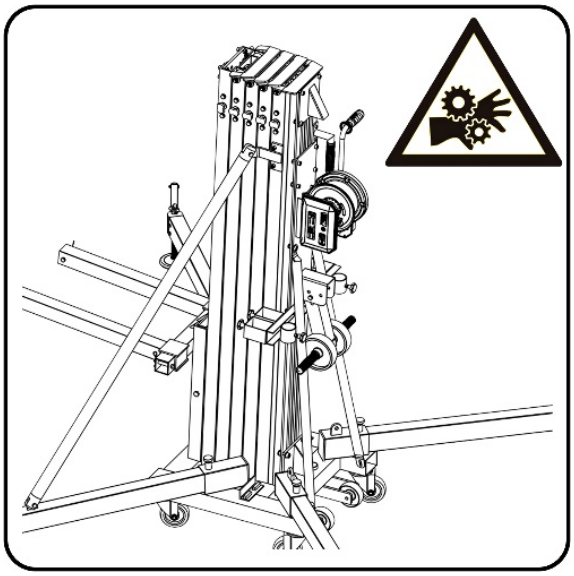

Figure 1

Keep hands and fingers away from moving parts of the tower.

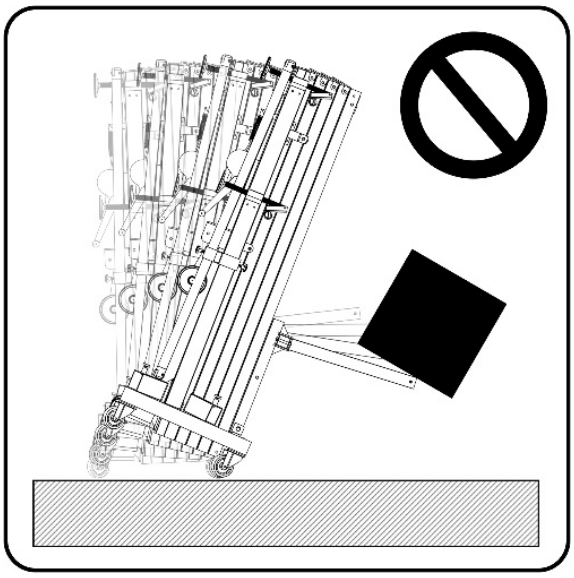

Figure 2

Not charge the tower without the stabilizer legs.

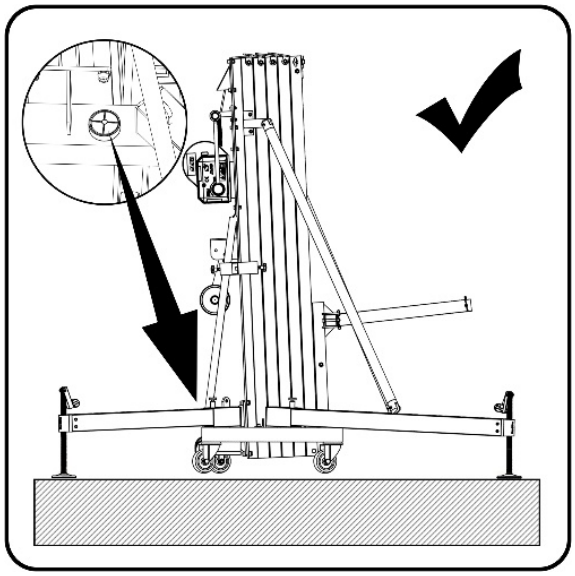

Figure 3

Do not lift the tower without proper leveling. To lift a load, the tower must always be stabilized.

The wheels must not touch the ground.

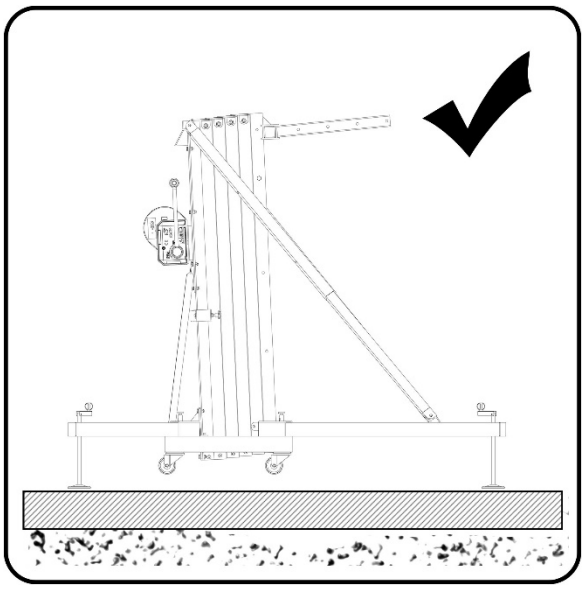

Figure 4

Place the tower on a stable surface.

If the ground has a low degree of compaction (earth, gravel, etc..) consult the section of load data.

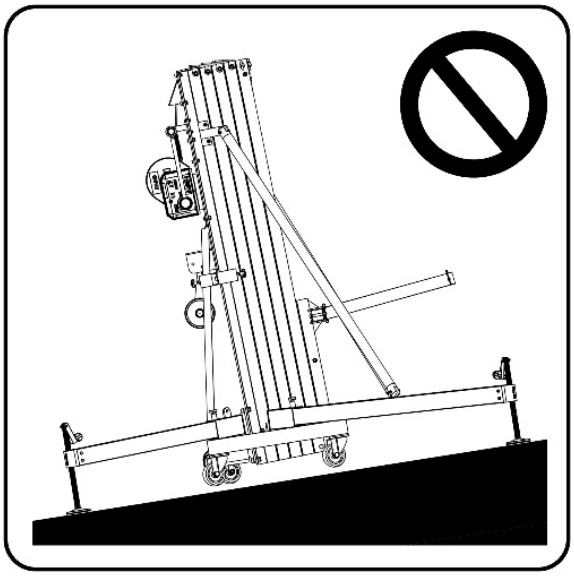

Figure 5

Do not use the tower on inclined surfaces that require pieces to level the tower.

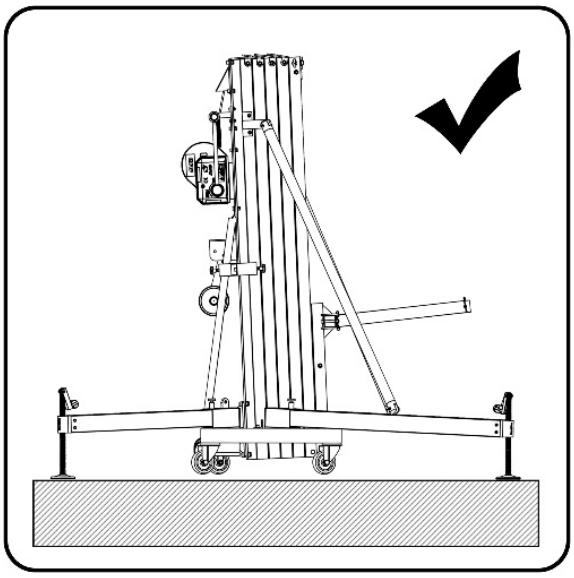

Figure 6

Mount the longest stabilizer legs in the part of the horns. Safety pins must lock the stabilizers.

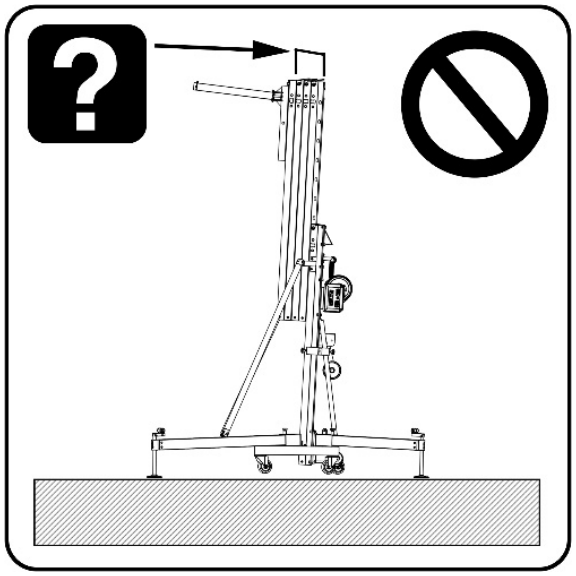

Figure 7

Lift the mast in the correct order.

Lift the mast of the tower starting always with the carriage. The last mast lifted must be the next to the section where the winch is placed.

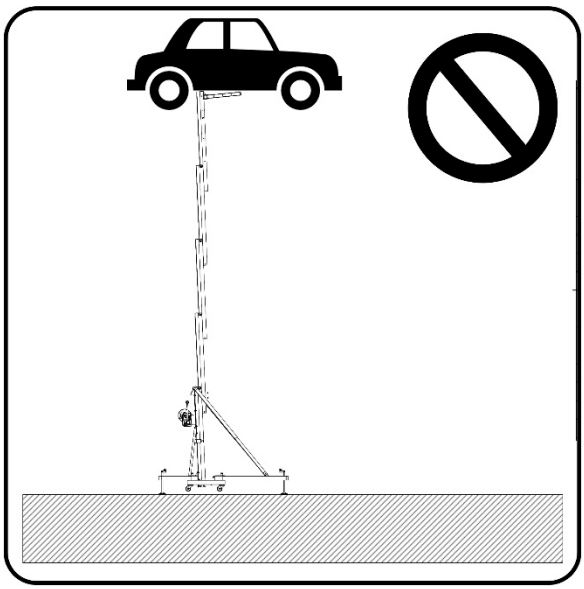

Figure 8

Before placing a load, make sure that the load never exceeds the maximum allowed. Consult the section of load data.

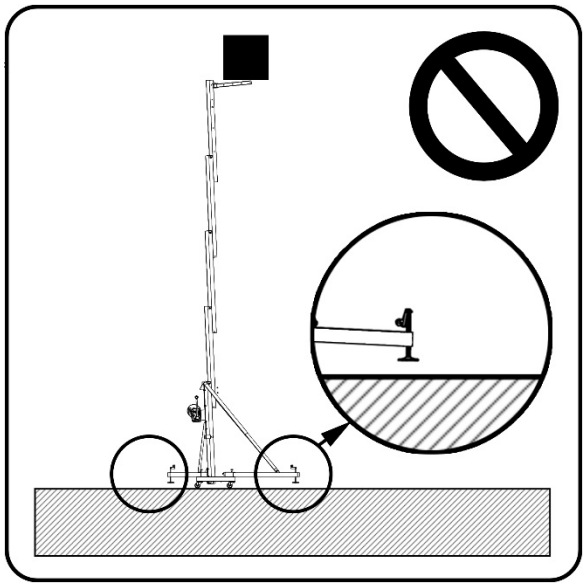

Figure 9

Never move a load without leveling the tower before.

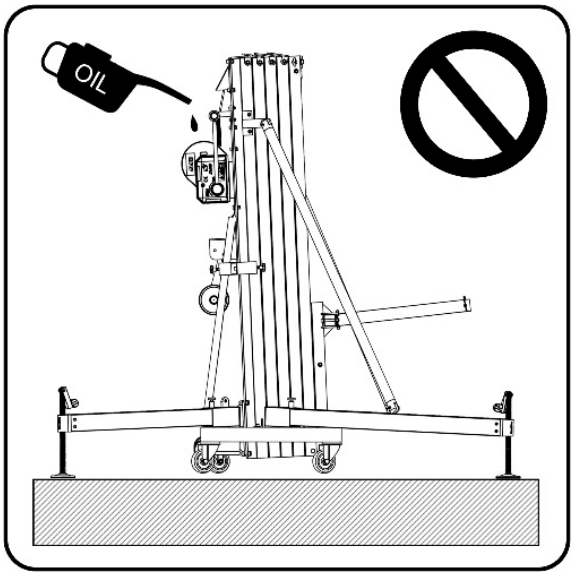

Figure 11

Not grease or lubricate the mechanism of the winch and the pulleys of the masts.

Figure 10

Do not use ladders on the tower or leaning against it.

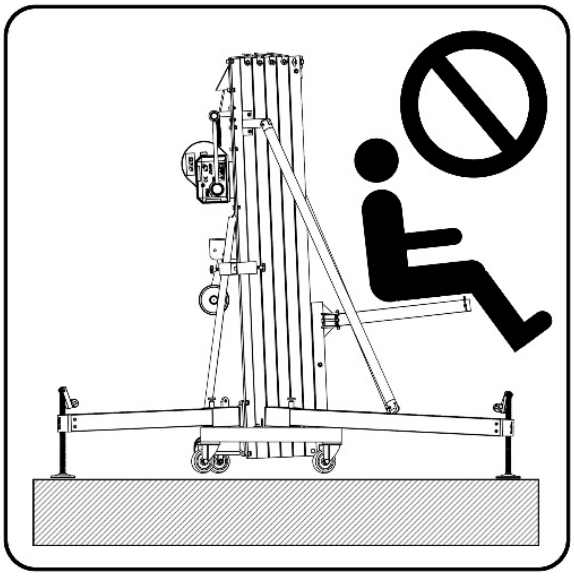

Figure 12

Not allowed to lift people or animals.

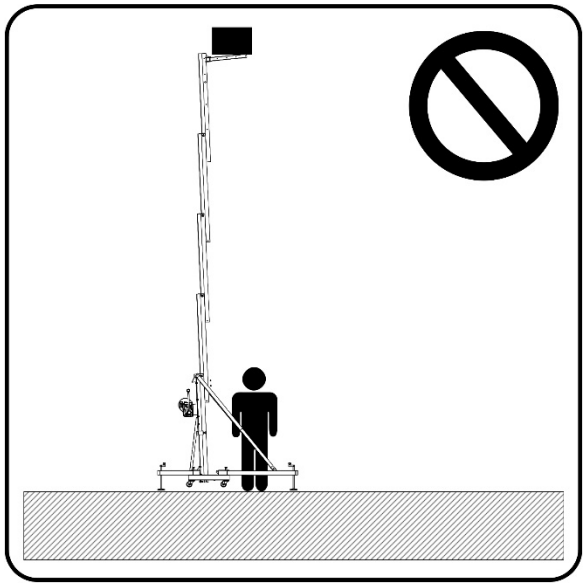

Figure 13

Do not stand under the load. The load must be secured to the tower in order to prevent that it cannot fall down.

Figure 14

Verify that the tower is beyond the reach of power lines.

The tower is not electrically insulated and can transmit currents of power lines.

On the following table is recommended the average length between the highest part of the structure and the power lines.

Voltage	Min. distance	
Between phases	**Meters**	**Feet**
0 to 230v	1.5	4.92
230v to 400v	2.8	9.19
400v to 50Kv	3.4	11.15
50Kv to 200Kv	4.9	16.08
200Kv to 350Kv	6.5	21.33
350Kv to 500Kv	8.2	26.90
500Kv to 750Kv	11.3	37.07
750Kv to 1000Kv	14.2	46.59

Figure 15

Not use the tower as welding mass.

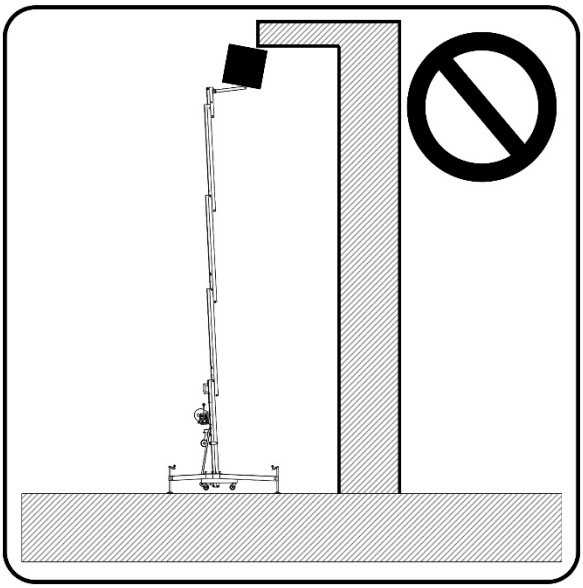

Figure 16

Not lift a load if there is danger of collision. Take at least 1.5 meters on any direction to lift the load safety.

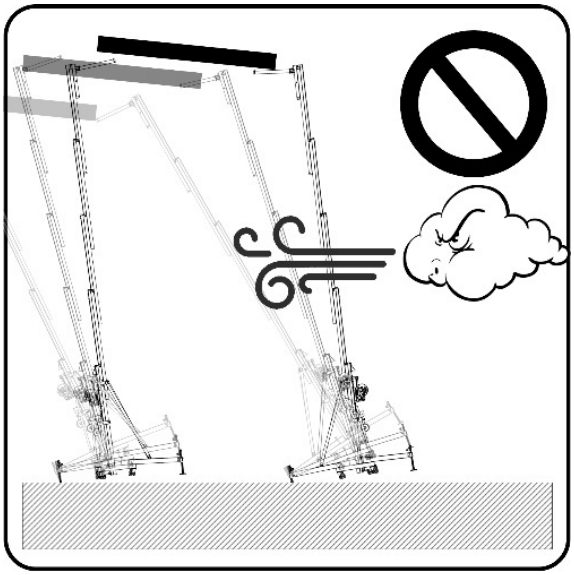

Figure 17

The tower can be used outdoor **only in structural mode and with the loads marked as mechanism mode (for security purpose),** if the wind speed is low and If it doesn't put the installation at risk. The installation is always under the responsibility of the owner.

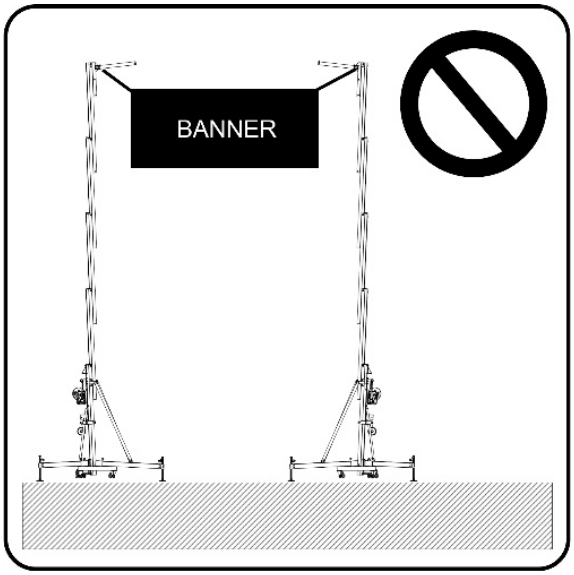

Figure 18

Do not use the tower as a support of banners or another type of decoration with strong wind that can destabilize the tower and make it falls down.

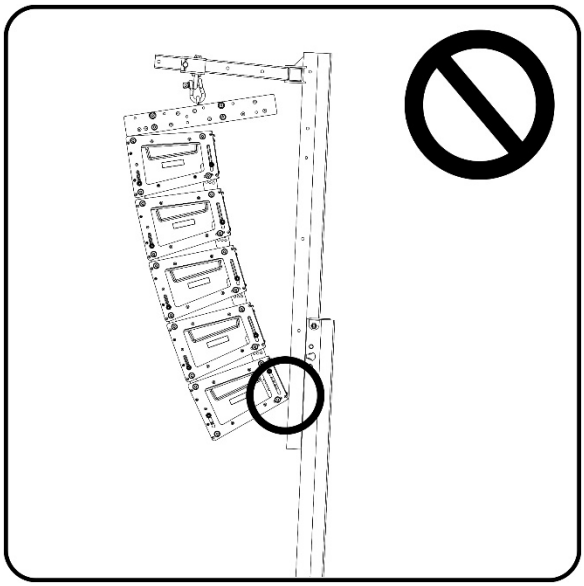

Figure 19

Prevent that the load do not touch the tower

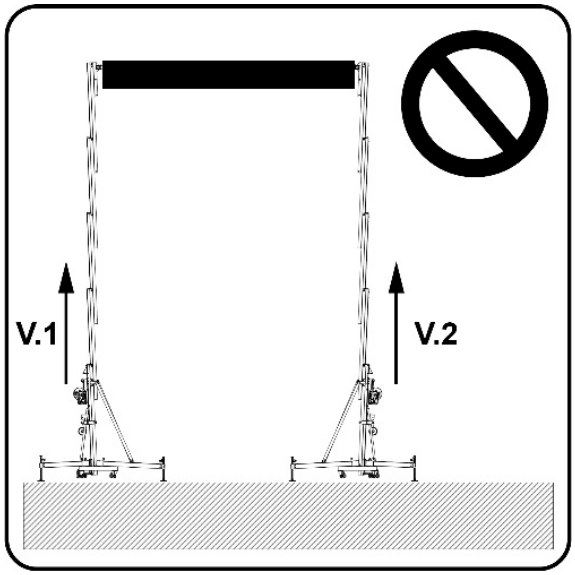

Figure 20

Do not lift structures that require more than one tower at different speeds

V1 ≠ V2 No lift

V1 = V2 Ok

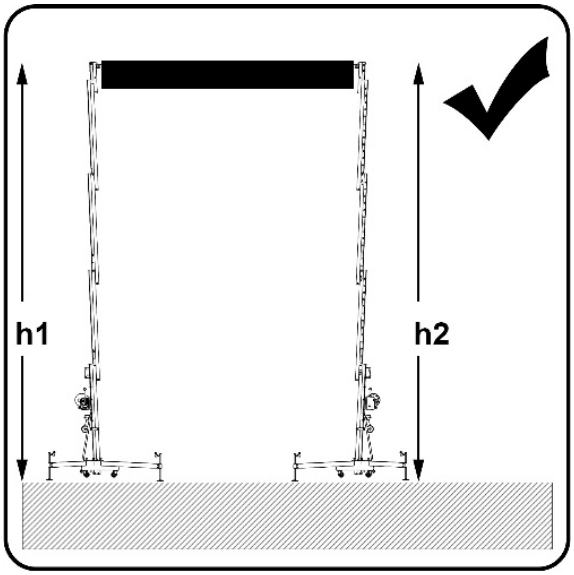

Figure 21

The structure must be levelled correctly. If not, the structure can fall.

Always h1 = h2

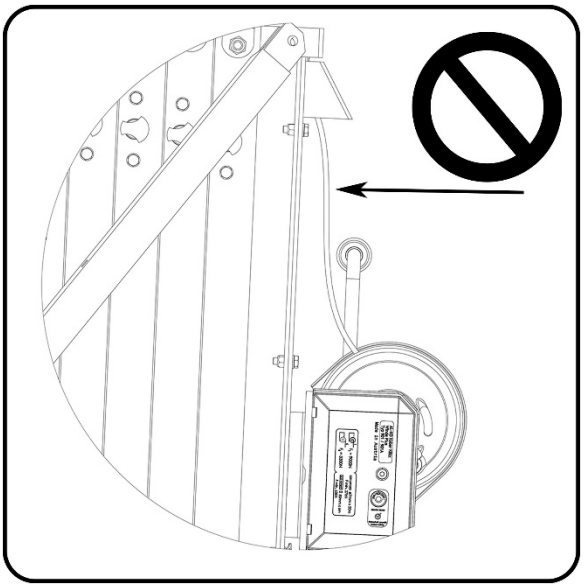

Figure 22

Under no circumstances should the tower be descended if the cable does not have sufficient tense. The cable should **ALWAYS** be tensioned in order to release the safety systems.

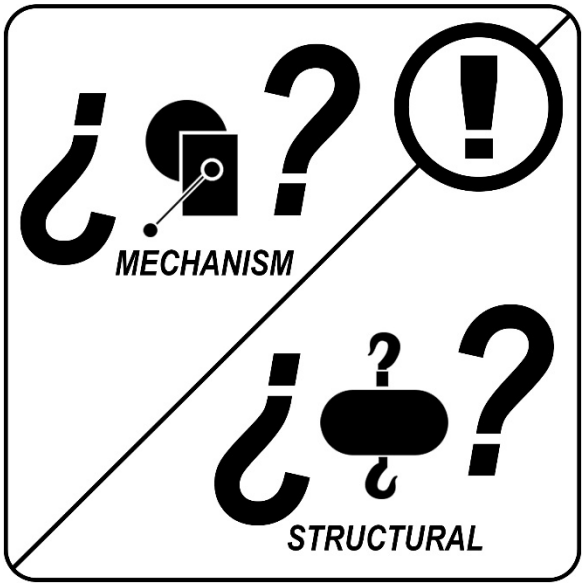

Figure 23

Never use structural loads in mechanism mode. It can result in a dangerous use and can break internal parts of the tower.

IMPORTANT ¡!! FOR STRUCTURAL OPERATION,

USE ONLY MANUAL HOISTS

PARTS IDENTIFICATION

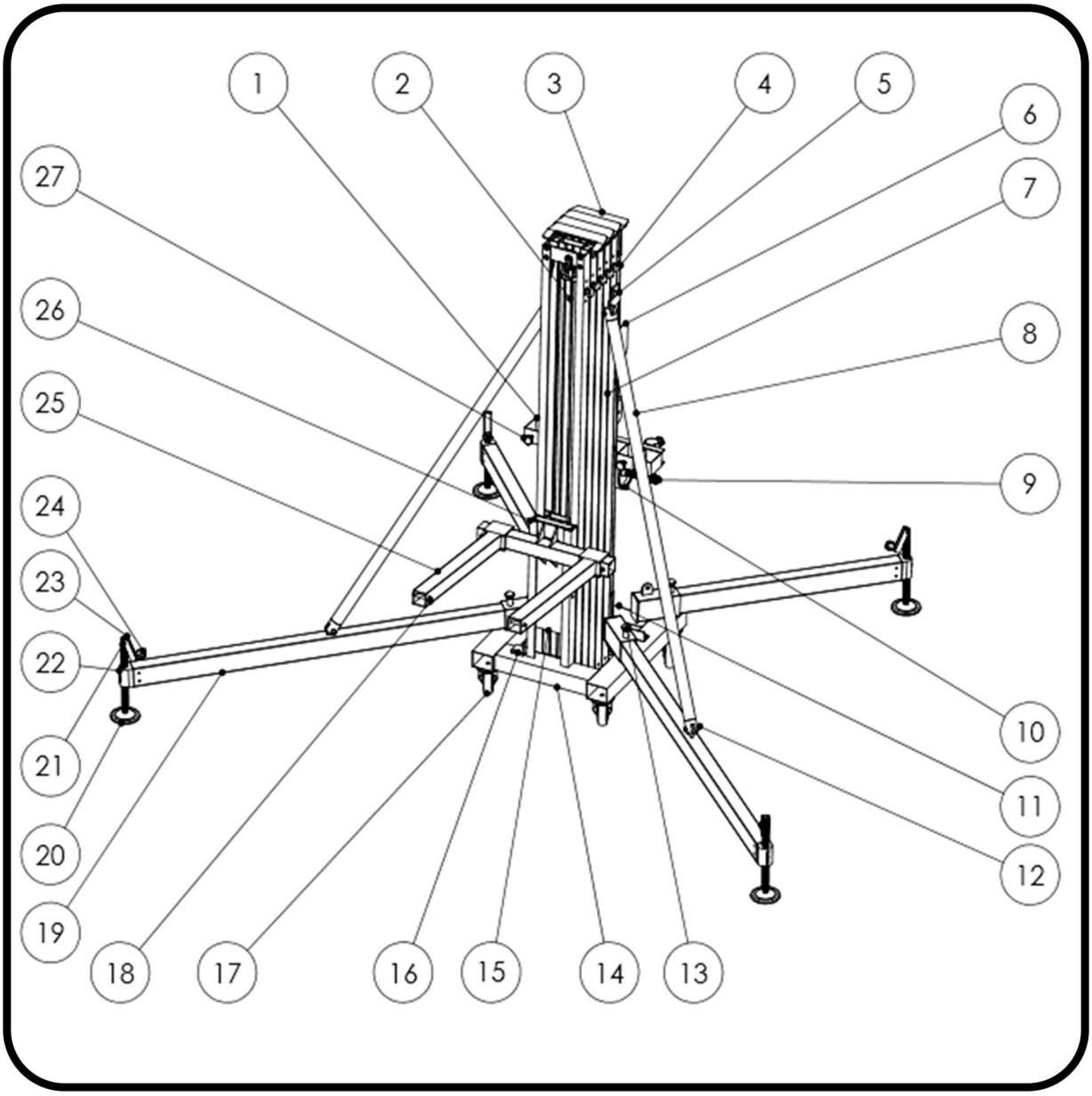

Figure 24.

1	Support stabilizer legs carrier	11	Steel carrier
2	Steel cable	12	Base wheel
3	Top boost reinforcement	13	Pin horn
4	Red knob mast security system	14	Frontal leg
5	Strut reinforcement mast support	15	Steel carrier
6	Winch	16	Leveler screw
7	Tower mast	17	Leveler brace
8	Steel reinforcement strut	18	Leveler knob

9	Red knob base security system	19	Forks
10	Tower base	20	Leg carrier knob

OPERATING MODES

OPERATING MODE AS MECHANISM (MECHANISM MODE)

This mode involves lifting the load with the help of the winch. That is, the winch is driven and the pulleys and cables are in charge of engaging and finally raising the load.

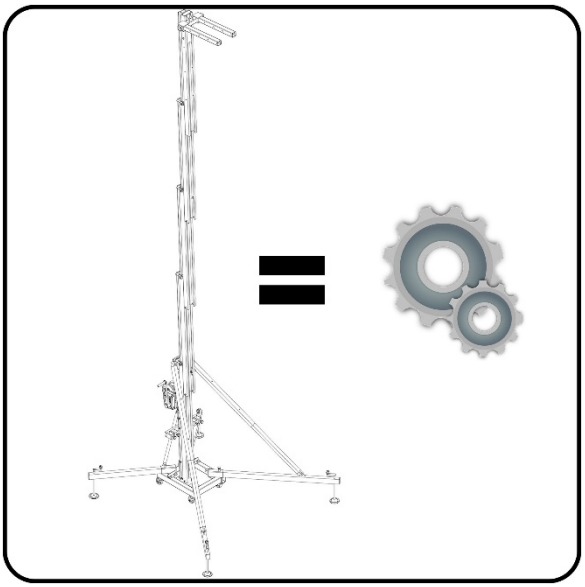

Figure 25

OPERATING MODE AS STRUCTURE (STRUCTURAL MODE)

This mode involves lifting the load with the help of a manual hoist. That is, the tower is used as a structure that is all locked to the required working height. Once the tower is raised to this desired height, the load must be raised with the hoist.

ATTENTION

IMPORTANT ¡!! FOR THIS PURPOSE, USE ONLY MANUAL HOISTS

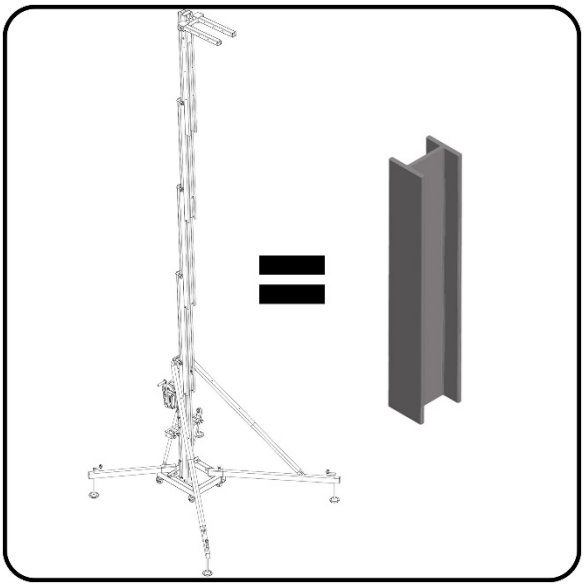

Figure 26

HOW TO USE STEP BY STEP

LINE ARRAY ELEVATION IN MECHANISM MODE

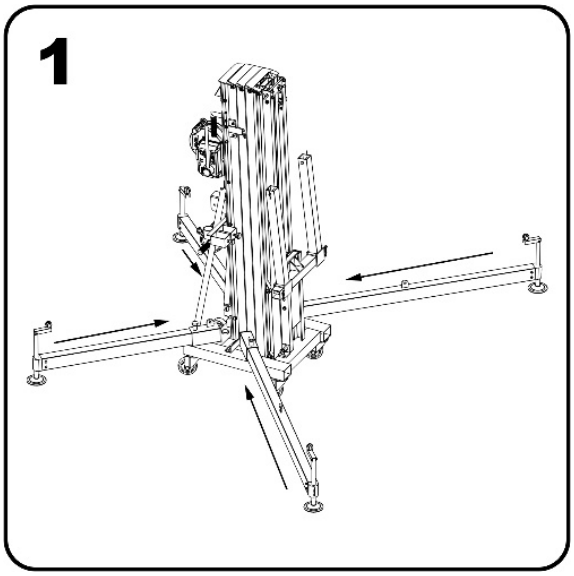

Figure 27

Fix and secure the stabilizer legs to the base.

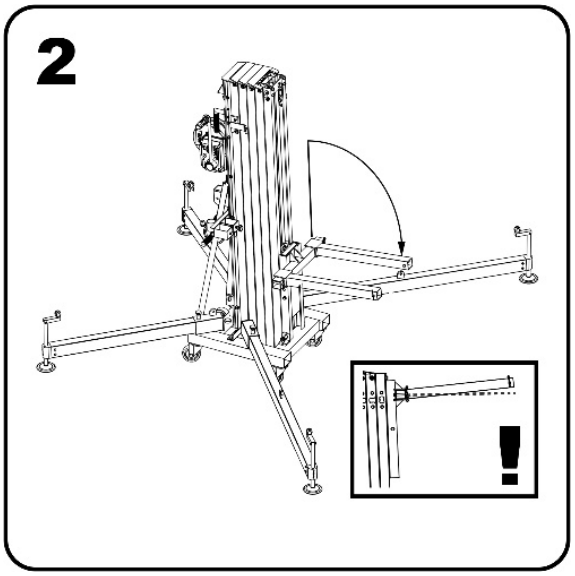

Figure 28

Turn the forks and adjust to the desired width. Ensure it with the pins.

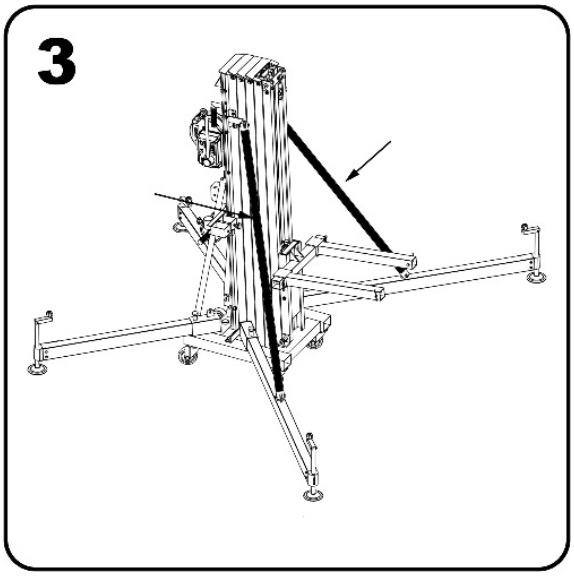

Figure 29

Place the reinforcement bars and fix them with its pins to frontal legs.

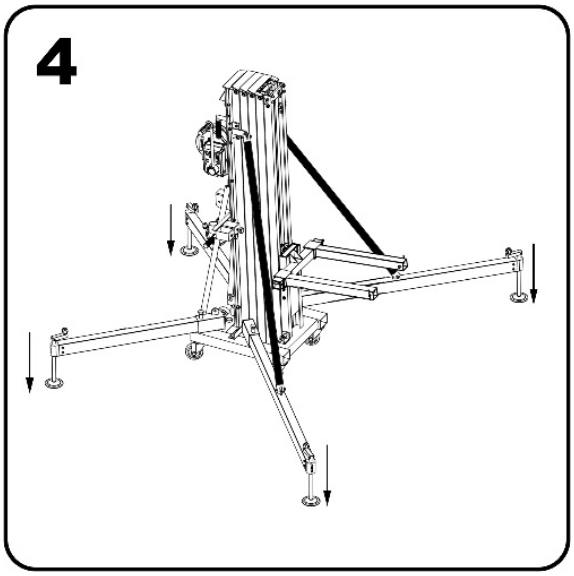

Figure 30

Place the tower in its working position and level until the bubble level is centered. Wheels should not come into contact with the ground.

Calculate the load to be lifted with the tower.
An example of basic load calculation is attached.

ITEM	WEIGHT (kg)	QUANTITY	TOTAL (kg)
line array accessory	5,5	1	5,5
Bumper	35	1	35
Loudspeakers	28	4	112
Cables	20	1	20
			172,5

Figure 31

In this example we have obtained a weight of 172,5 kg.

With that load, see what position the load should have on the forks of the tower. Take into account that the inclination of the loudspeakers and the bumper should not support any part of the tower.

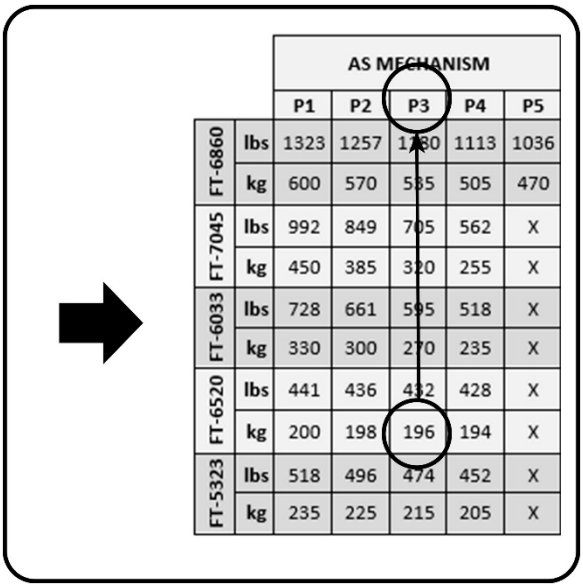

		AS MECHANISM				
		P1	P2	P3	P4	P5
FT-6860	lbs	1323	1257	1180	1113	1036
	kg	600	570	535	505	470
FT-7045	lbs	992	849	705	562	X
	kg	450	385	320	255	X
FT-6033	lbs	728	661	595	518	X
	kg	330	300	270	235	X
FT-6520	lbs	441	436	432	428	X
	kg	200	198	196	194	X
FT-5323	lbs	518	496	474	452	X
	kg	235	225	215	205	X

Figure 32

Choose the FT tower model. Check for the value immediately above the load you need. With this value, take the farthest position to which the accessory for flying must be placed. It is recommended that this position is always as close to the carriage.

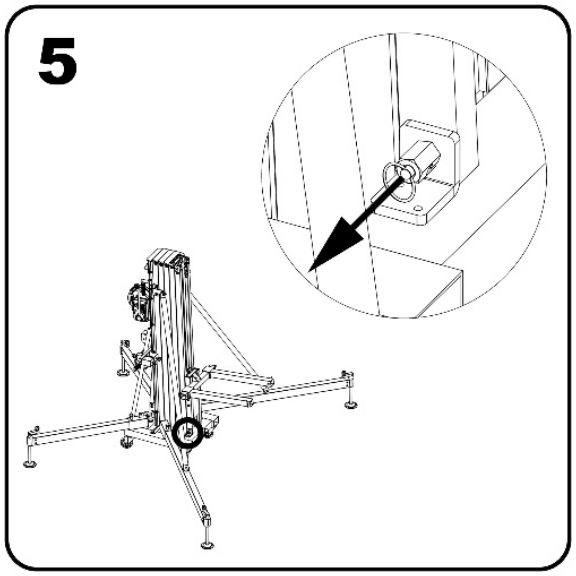

Figure 33

Unlock the security brake of the aluminium carrier

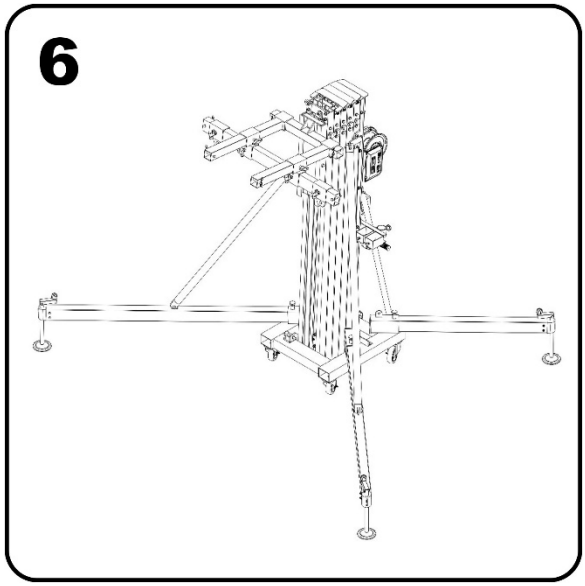

Figure 34

Place the accessory in the calculated position. Block it making sure that the screws are inserted into the hole of the fork position.

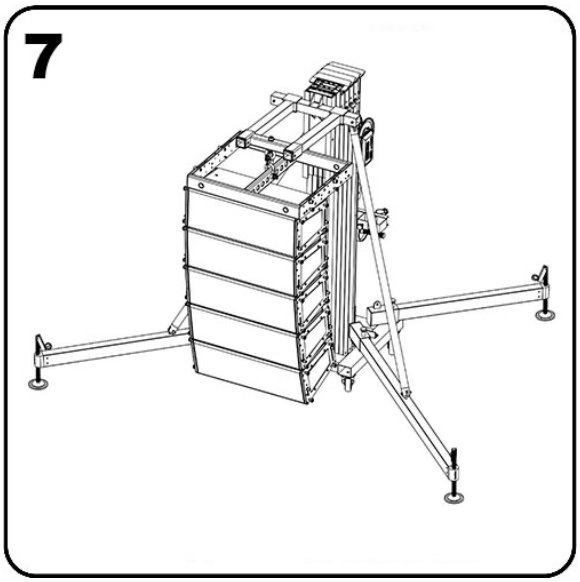

Figure 35

Join the line array equipment to the tower.

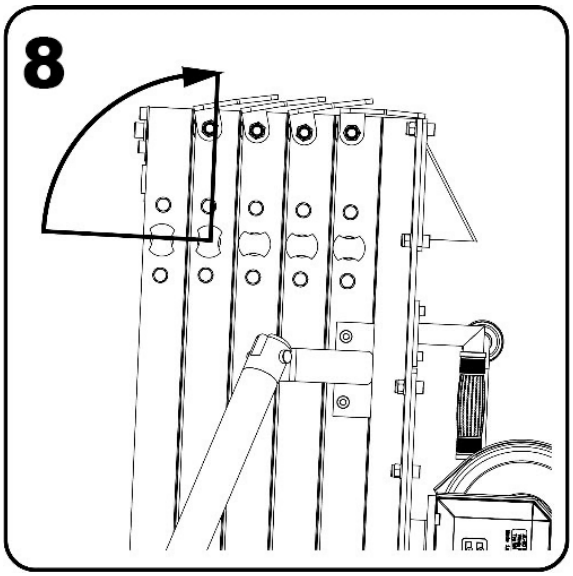

Figure 36

Unlock the mast safety system. Operate the winch handle to raise the load.

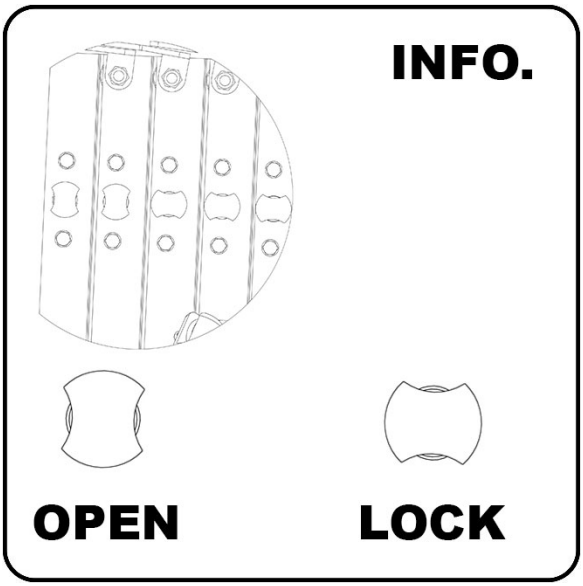

Figure 37

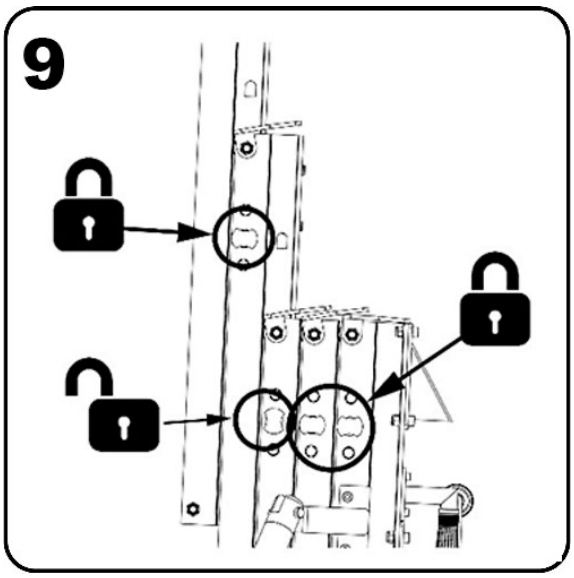

Figure 38

When the section reaches its limit, lock with the security system and unlock the following security system to lift the next mast. Do the same operation until you reach the required height.

All security systems must be in locked position. Slack the cable of the winch so that the system can stabilize correctly.

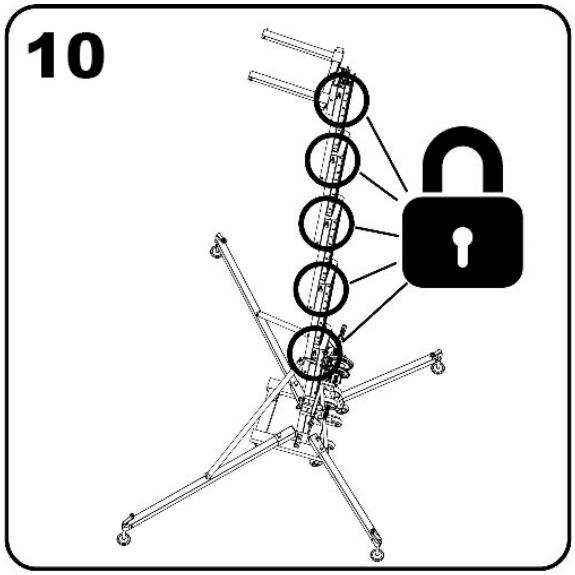

Figure 39

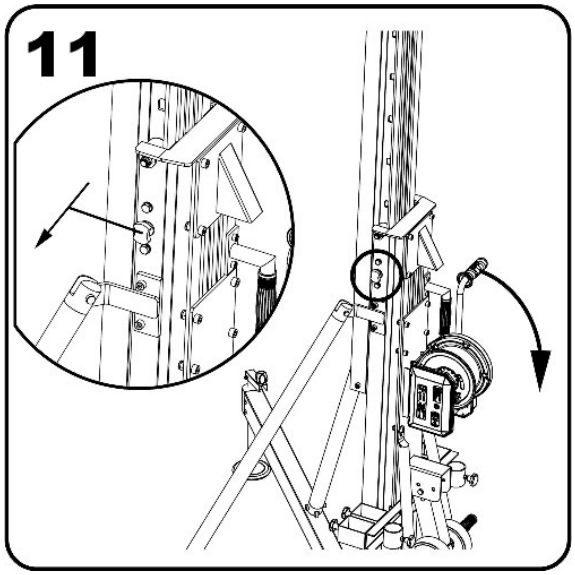

Figure 40

To descend the load. **Tense the cable and unlock the first security system**. Turn the winch while keeping the safety system unlocked with your other hand. If the safety system is not operated with one hand, the tower will lower until it is locked.

WARNING! If the tower is attempted to go down without tension in the cable and any of the safety systems are activated, a dangerous situation will occur because the load will descend very abruptly, being able to destabilize the whole installation and incurring in a serious accident.

Once the load is descended, block all sections and follow steps 4 to 1 (in that order)

LINE ARRAY ELEVATION IN STRUCTURE MODE

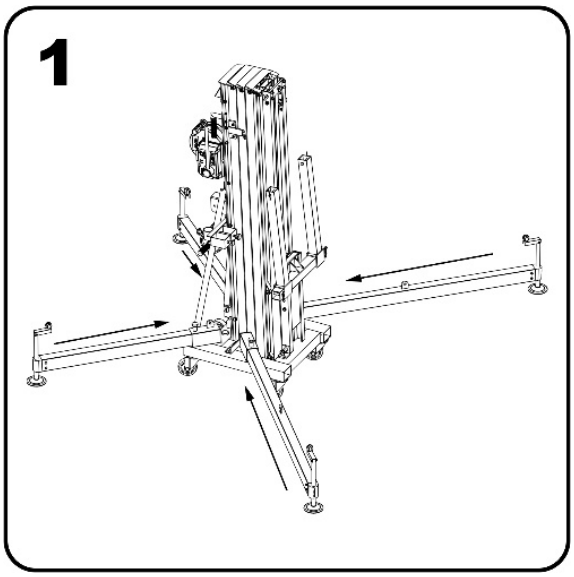

Figure 41

Fix and secure the stabilizer legs to the base.

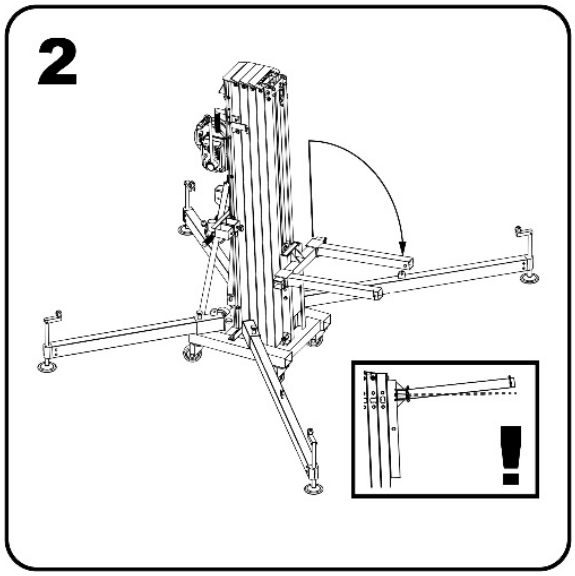

Figure 42

Turn the forks and adjust to the desired width. Ensure it with the pins.

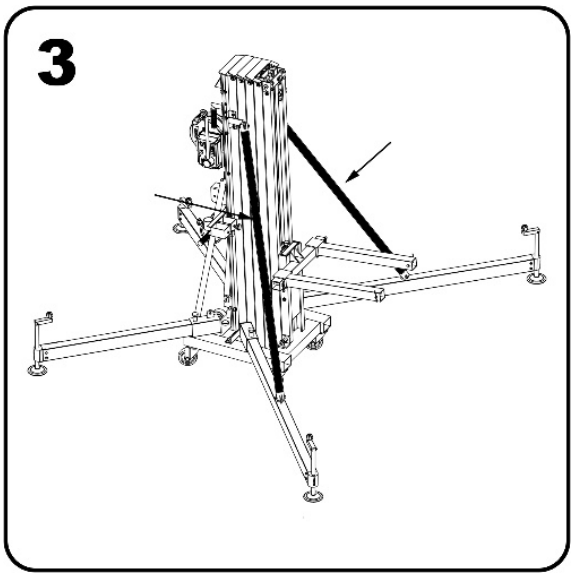

Figure 43

Place the reinforcement bars and fix them with its pins to the frontal legs.

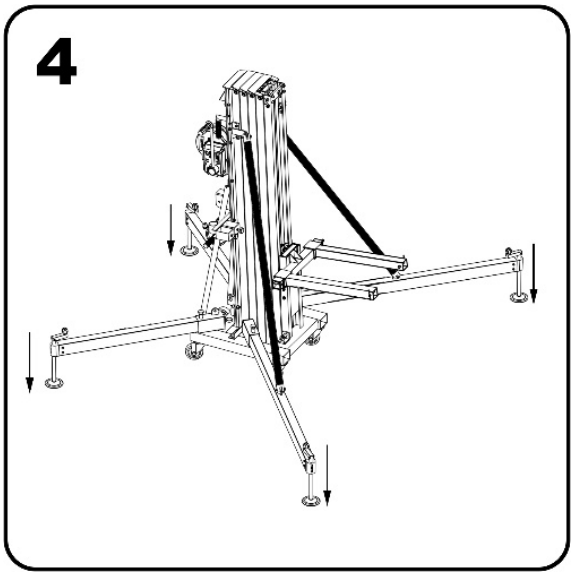

Figure 44

Place the tower in its working position and level until the bubble level is centered. Wheels should not come into contact with the ground

Calculate the load to be lifted with the tower. An example of basic load calculation is attached.

ITEM	WEIGHT (kg)	QUANTITY	TOTAL (kg)
Line array accessory	5,5	1	5,5
Bumper	35	1	35
Loudspeakers	28	6	168
Cables	30	1	30
			238,5

Figure 45

In this example we have obtained a weight of 238,5 kg.

With that load, see what position the load should have on the forks of the tower. Take into account that the inclination of the loudspeakers and the bumper should not support any part of the tower.

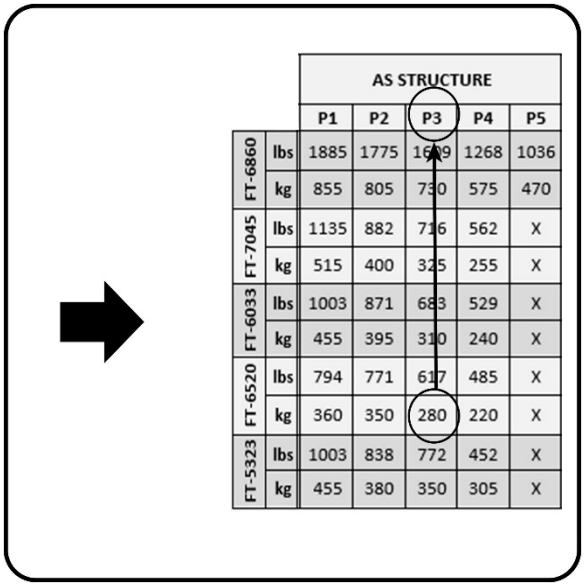

		AS STRUCTURE				
		P1	P2	P3	P4	P5
FT-6860	lbs	1885	1775	1609	1268	1036
	kg	855	805	730	575	470
FT-7045	lbs	1135	882	716	562	X
	kg	515	400	325	255	X
FT-6033	lbs	1003	871	683	529	X
	kg	455	395	310	240	X
FT-6520	lbs	794	771	617	485	X
	kg	360	350	280	220	X
FT-5323	lbs	1003	838	772	452	X
	kg	455	380	350	305	X

Figure 46

Choose the FT tower model. Check for the value immediately above the load you need. With this value, take the exact position to which the accessory for flying must be placed.

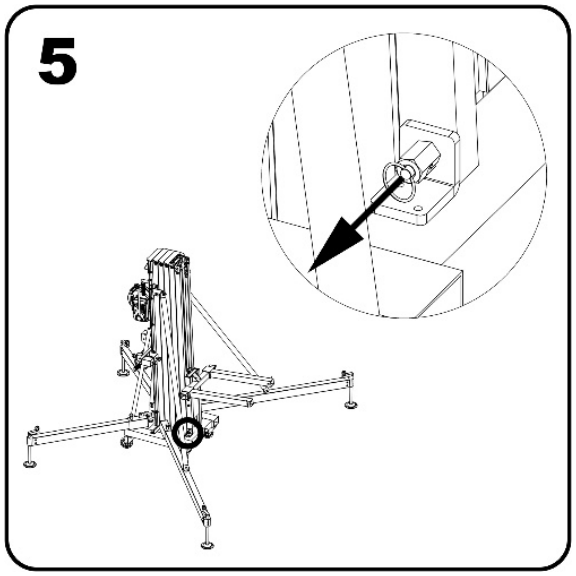

Figure 47

Unlock the security brake of the aluminium carrier

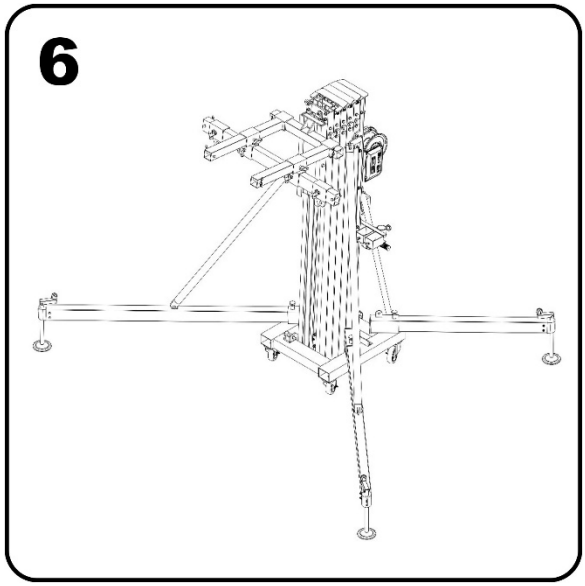

Figure 48

Place the accessory in the calculated position.

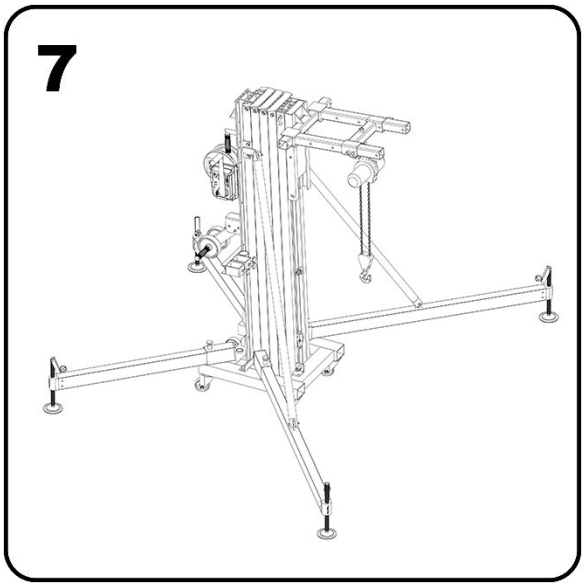

Figure 49

Hung the manual hoist of the tower support. The hoist must have a path equal to or greater than the maximum height of the tower.

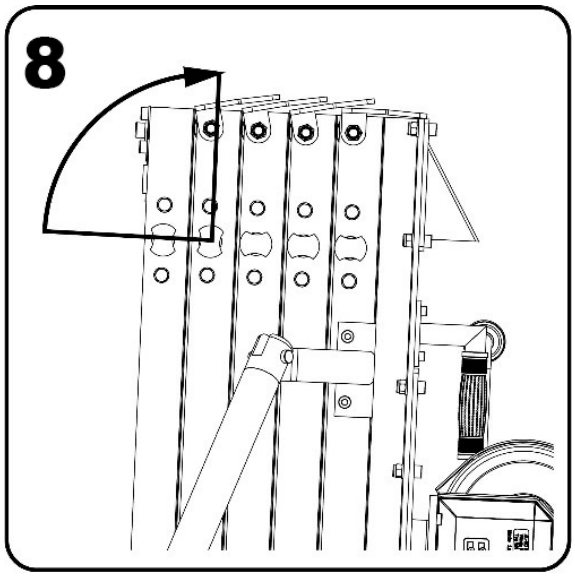

Figure 50

Unlock the mast safety system. Operate the handle of the winch to raise the load.

ATTENTION

IMPORTANT ¡!! FOR THIS PURPOSE, USE ONLY MANUAL HOISTS

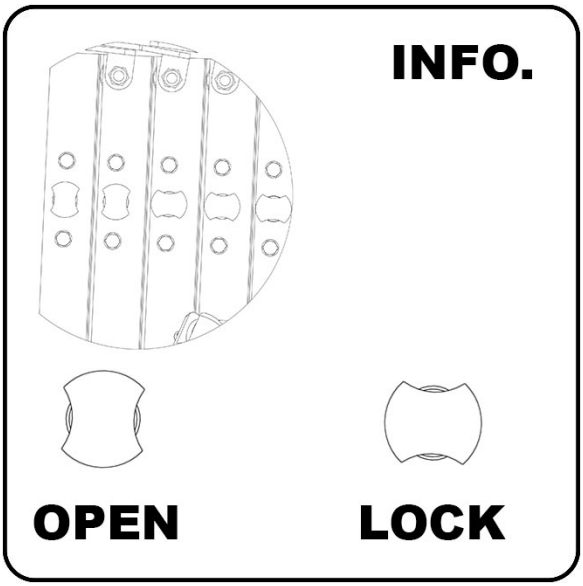

Figure 51

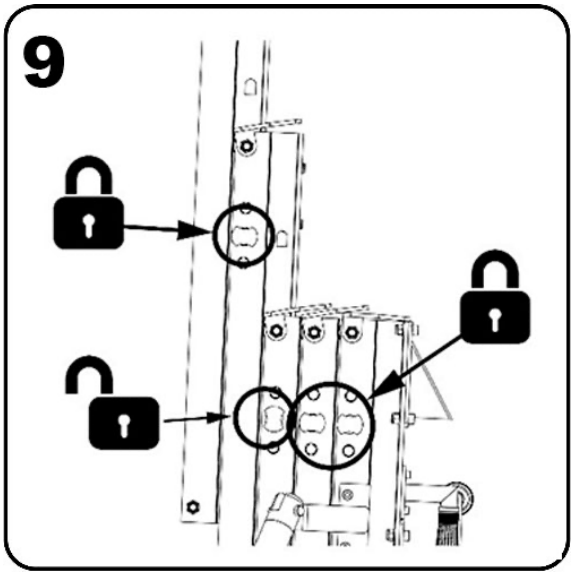

Figure 52

When the section reaches its end of path, lock with the safety system and unlock the next safety system to raise the next mast. Perform the same operation until you reach the required height.

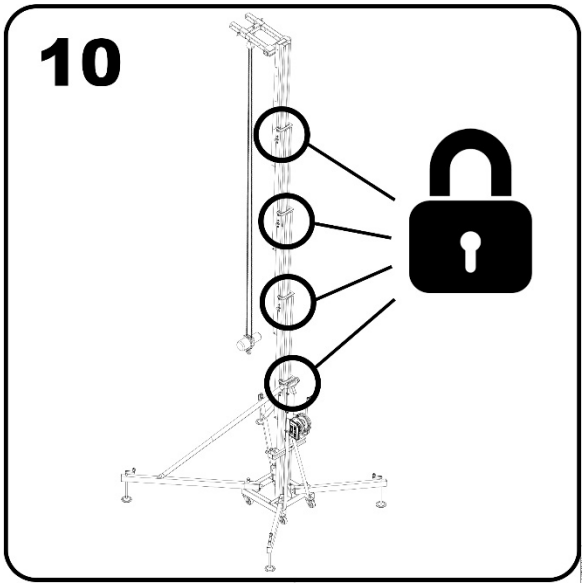

Figure 53

All security systems must be in locked position. Slacken the cable of the winch so that the system can stabilize correctly.

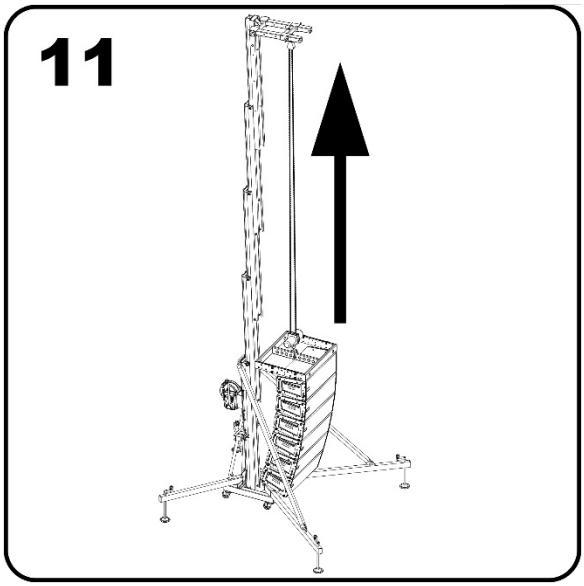

Figure 54

Raise the load with the hoist to the required height.

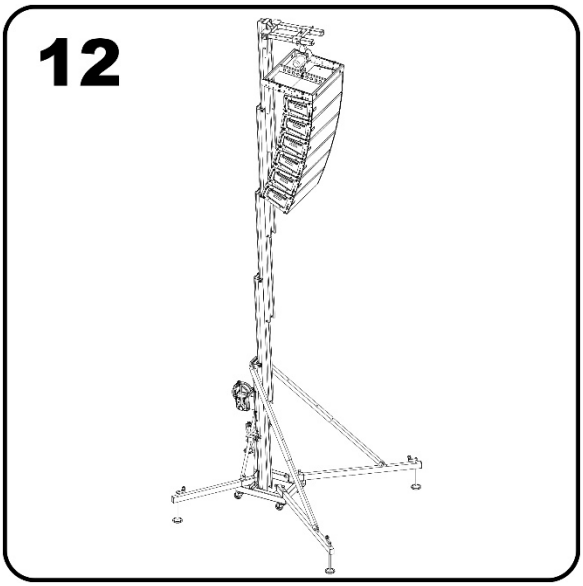

Figure 55

Take into account the space of the manual hoist. This dimension causes that the maximum height of the tower to be reduced.

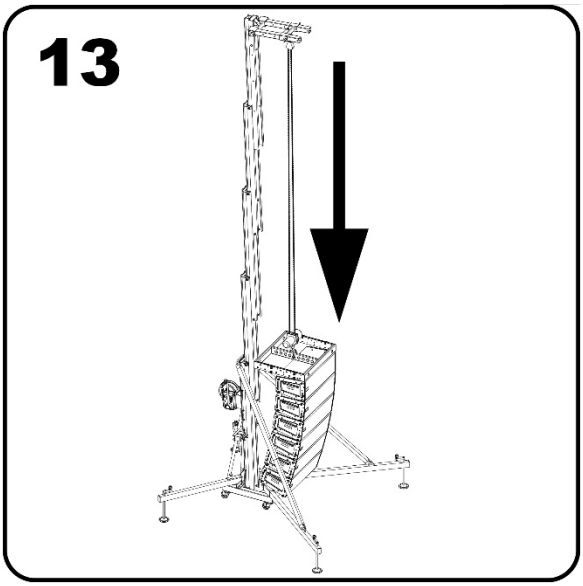

Figure 56

To descend the load. Descend the load with the manual hoist until it is just above the ground. **The load should never be descended with the tower winch**.

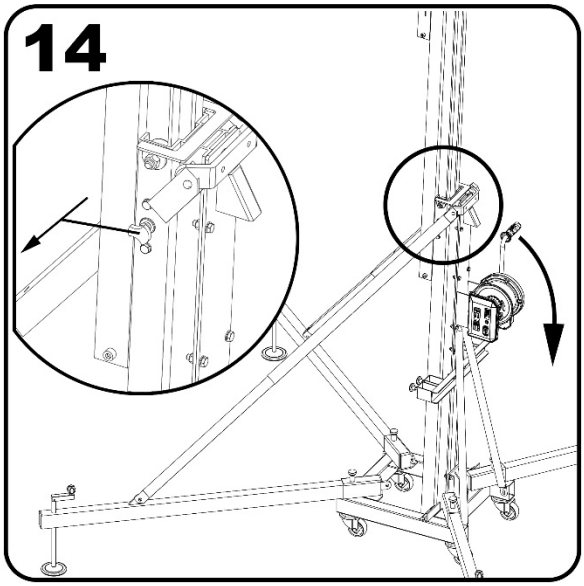

Figure 57

To descend the load. **Tense the cable and unlock the first security system**. Turn the winch while keeping the safety system unlocked with your other hand. If the safety system is not operated with one hand, the tower will lower until it is locked.

WARNING! If the tower is attempted to go down without tension in the cable and any of the safety systems are activated, a dangerous situation will occur because the load will descend very abruptly, being able to destabilize the whole installation and incurring in a serious accident.

Once the load is descended, block all sections and follow steps 4 to 1 (in that order).

TRUSS SYSTEM ELEVATION IN MECHANISM MODE

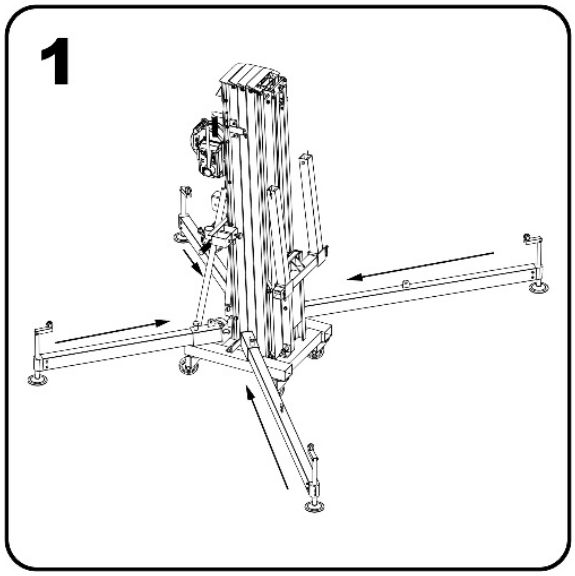

Figure 58

Fix and secure the stabilizer legs to the base.

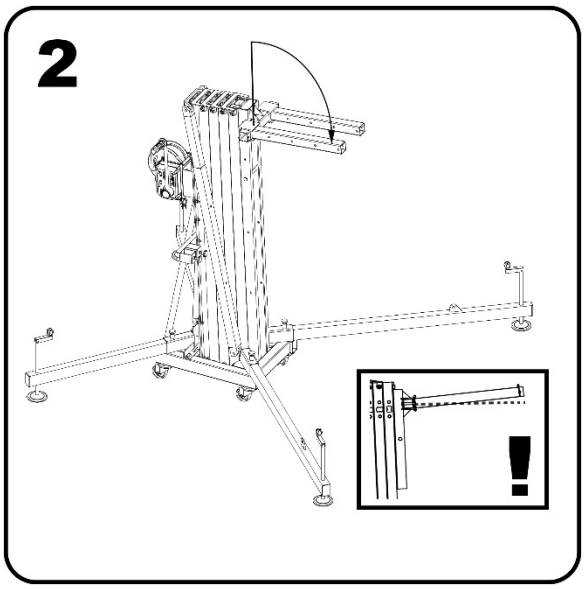

Figure 59

Turn the forks and adjust to the desired width. Ensure it with the pins.

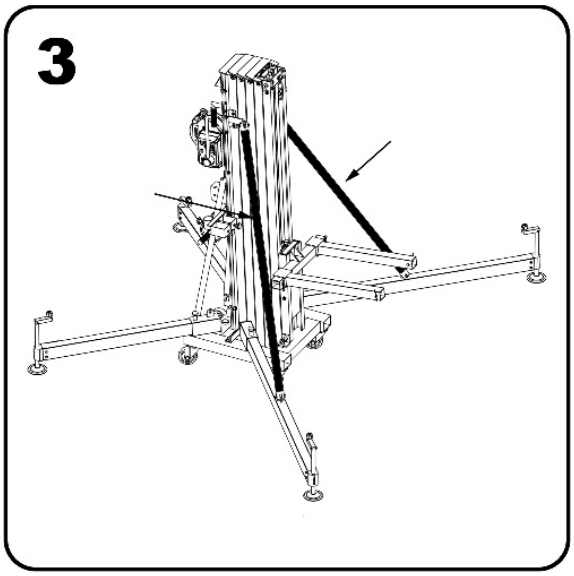

Figure 60

Place the reinforcement bars and fix them with its pins to frontal legs.

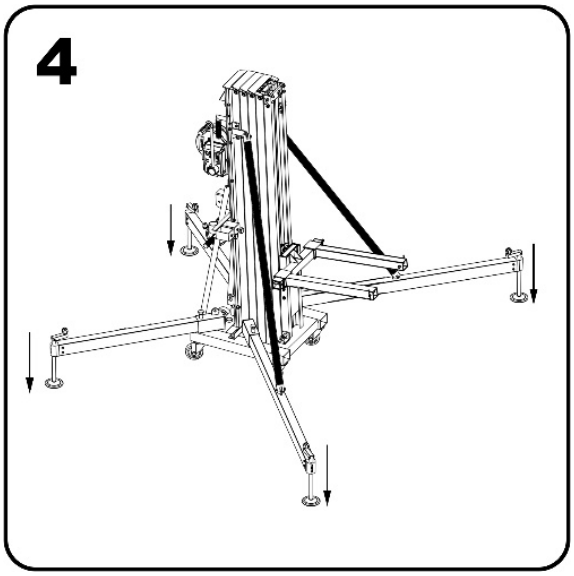

Figure 61

Place the tower in its working position and level until the bubble level is centered. Wheels should not take into contact with the ground

Calculate the load to be lifted with the tower. An example of basic load calculation is attached.

ITEM	WEIGHT (kg)	QUANTITY	TOTAL (kg)
Truss accessory	0,75	2	1,5
Complete truss system	53,3	0,5	26,65
Loads	368	0,5	184
Cables	38	0,5	19
			231,15

Figure 62

In this example we have a weight of 231,15 kg.

With that load, check what position the load should have on the tower fork. Take into account that the truss is supported by two points of the fork. To find out which is the largest load, take the farthest position from the base of the fork.

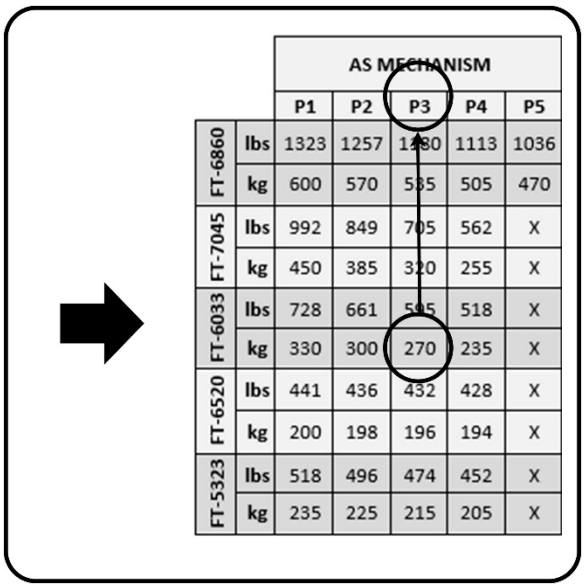

		AS MECHANISM				
		P1	P2	P3	P4	P5
FT-6860	lbs	1323	1257	1180	1113	1036
	kg	600	570	535	505	470
FT-7045	lbs	992	849	705	562	X
	kg	450	385	320	255	X
FT-6033	lbs	728	661	595	518	X
	kg	330	300	270	235	X
FT-6520	lbs	441	436	432	428	X
	kg	200	198	196	194	X
FT-5323	lbs	518	496	474	452	X
	kg	235	225	215	205	X

Figure 63

Choose the FT tower model. Check for the value immediately above the load you need. With this value, take the exact position to which the accessory for fixing the truss must be placed.

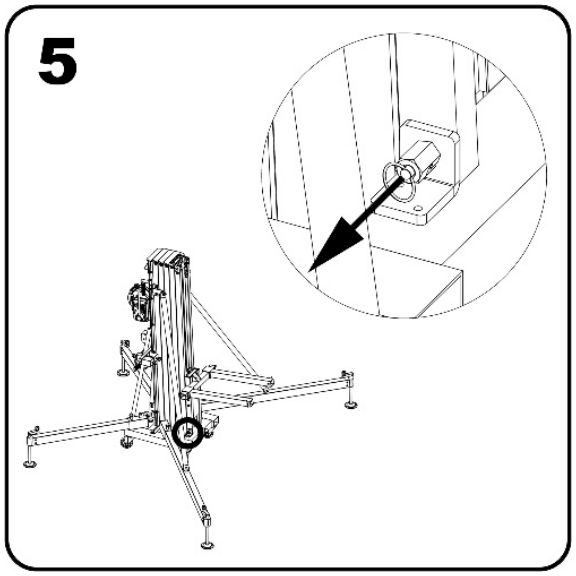

Figure 64

Unlock the security brake of the aluminium carrier

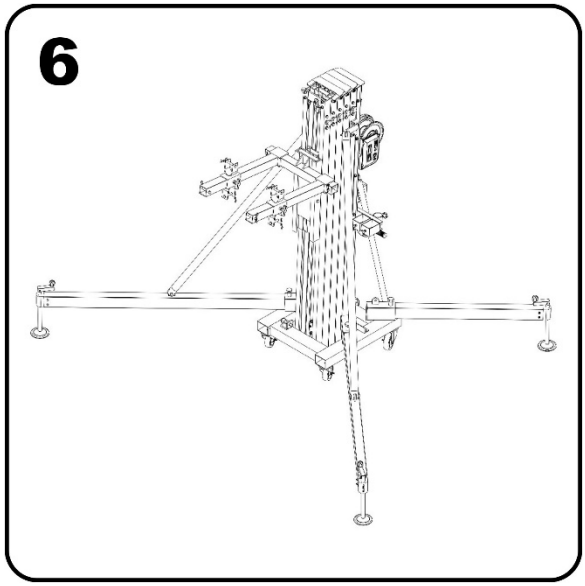

Figure 65

Place the accessory in the calculated position.

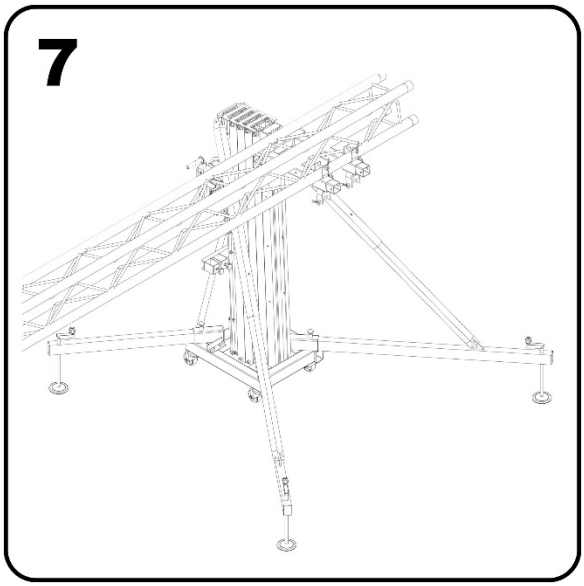

Figure 66

Join the truss system to the tower.

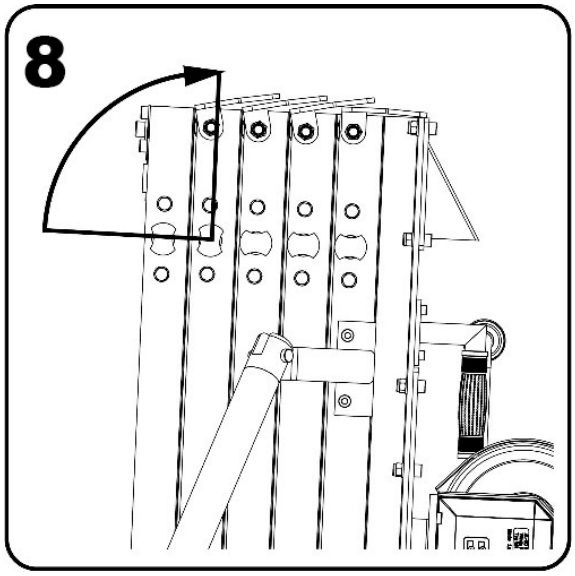

Figure 67

Unlock the mast safety system. Operate the winch handle to raise the load.

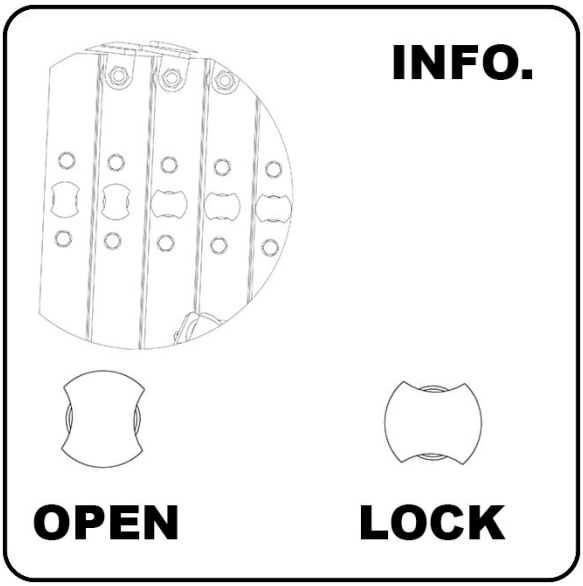

Figure 68

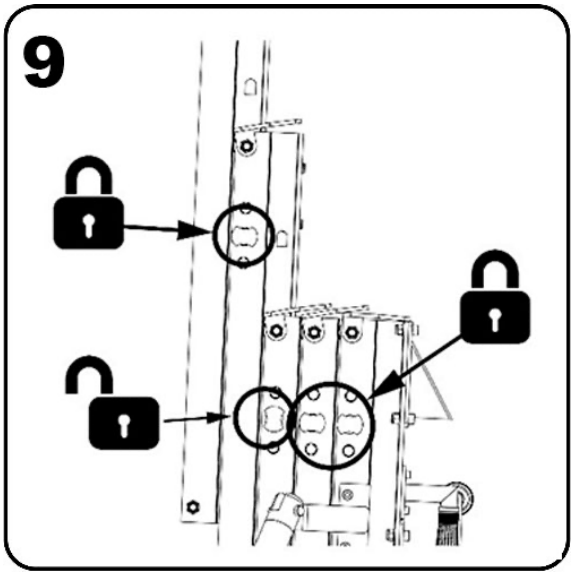

Figure 69

When the section reaches its end of path, lock with the safety system and unlock the next safety system to raise the next mast. Perform the same operation until you reach the required height.

All safety systems must be in their locked position. Slack the cable from the winch so that the system is seated.

WARNING! The rate of rise and descend should be similar. If the structure rises or descends faster at one end, a destabilization of the entire facility can occur, causing a serious accident.

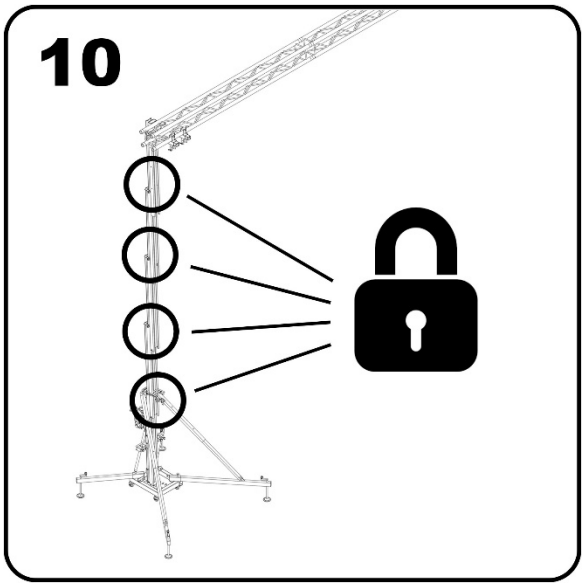

Figure 70

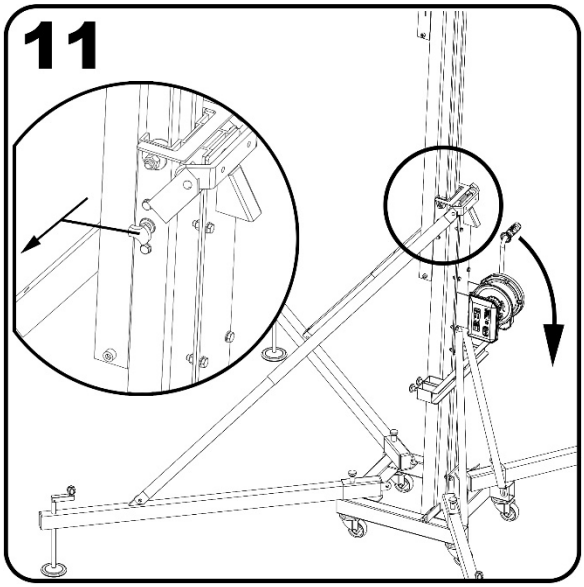

Figure 71

To descend the load. **Tense the cable and unlock the first security system**. Turn the winch while keeping the safety system unlocked with your other hand. If the safety system is not operated with one hand, the tower will lower until it is locked.

WARNING! If the tower is attempted to go down without tension in the cable and any of the safety systems are activated, a dangerous situation will occur because the load will descend very abruptly, being able to destabilize the whole installation and incurring in a serious accident.

Once the load is descended, block all sections and follow steps 4 to 1.

TRUSS SYSTEM ELEVATION IN STRUCTURE MODE

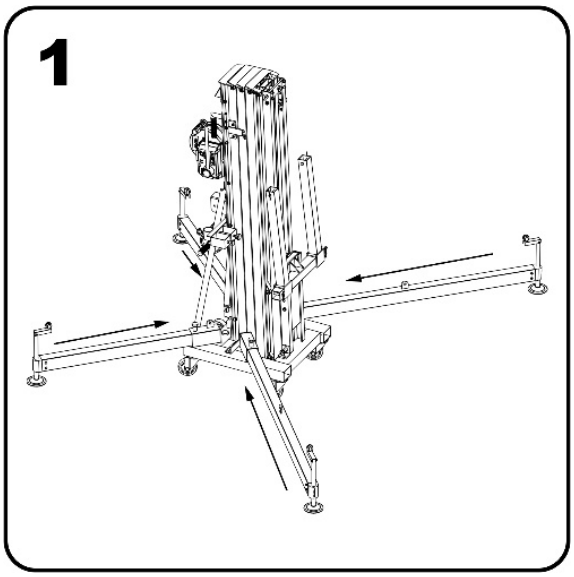

Figure 72

Fix and secure the stabilizer legs to the base.

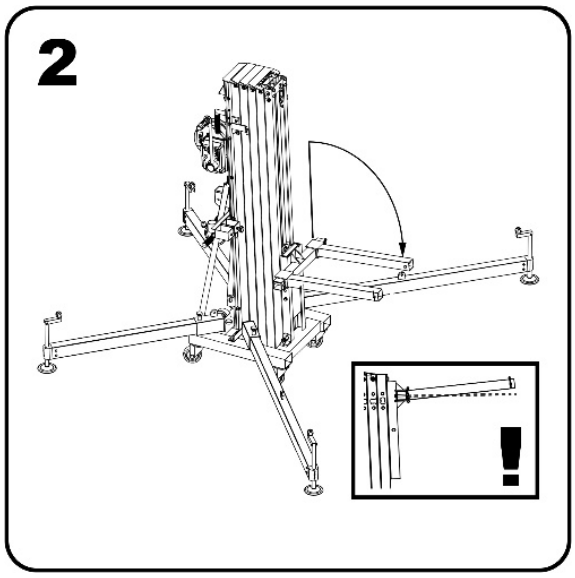

Figure 73

Turn the forks and adjust to the desired width. Ensure it with the pins.

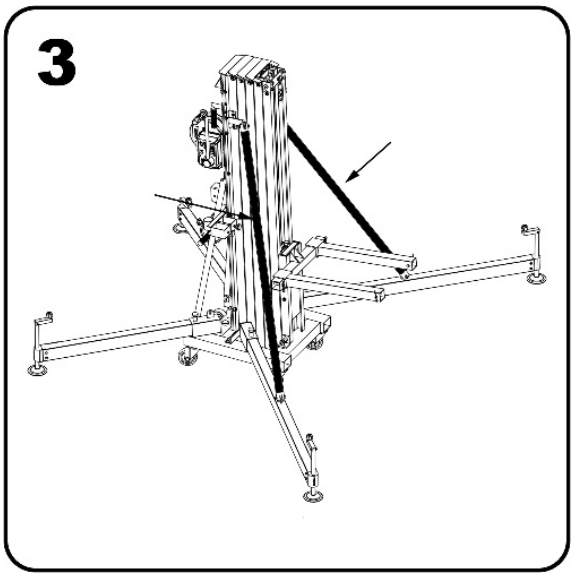

Figure 74

Place the reinforcement bars and fix them with its pins to frontal legs.

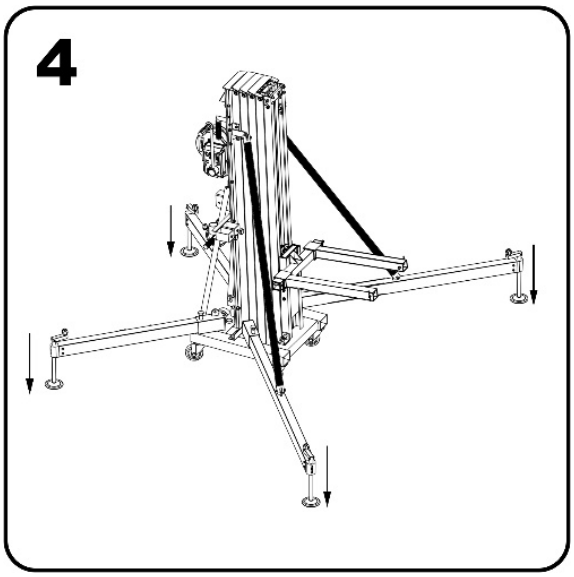

Figure 75

Place the tower in its working position and level until the bubble level is centered. Wheels should not take into contact with the ground

.

Calculate the load to be lifted with the tower. An example of basic load calculation is attached.

ITEM	WEIGHT (kg)	QUANTITY	TOTAL (kg)
Truss accessory	0,75	2	1,5
Complete truss system	137	0,5	68,50
Loads	368	0,5	184
Cables	51	0,5	25,50
			279,50

Figure 76

In this example we have a weight of 279,50 kg.

With that load, see what position the load should have on the tower fork. Take into account that the truss is supported by two points of the fork. To find out which is the largest load, take the position farthest from the base of the fork.

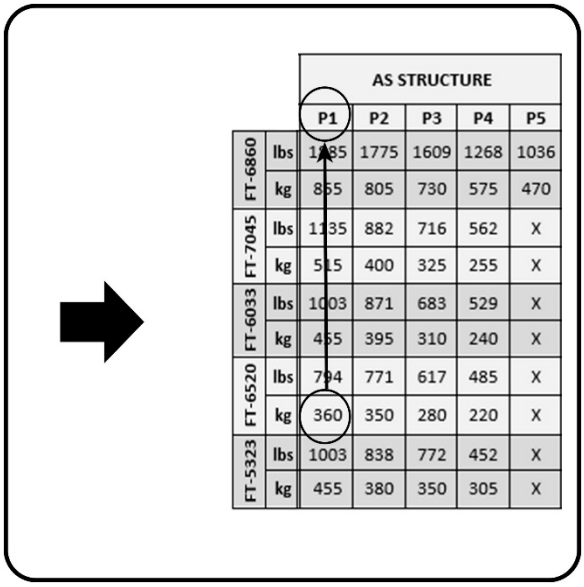

		AS STRUCTURE				
		P1	P2	P3	P4	P5
FT-6860	lbs	1885	1775	1609	1268	1036
	kg	855	805	730	575	470
FT-7045	lbs	1135	882	716	562	X
	kg	515	400	325	255	X
FT-6033	lbs	1003	871	683	529	X
	kg	455	395	310	240	X
FT-6520	lbs	794	771	617	485	X
	kg	360	350	280	220	X
FT-5323	lbs	1003	838	772	452	X
	kg	455	380	350	305	X

Figure 77

Choose the FT tower model. Check for the value immediately above the load you need. With this value, take the exact position to which the accessory for fixing the truss must be placed.

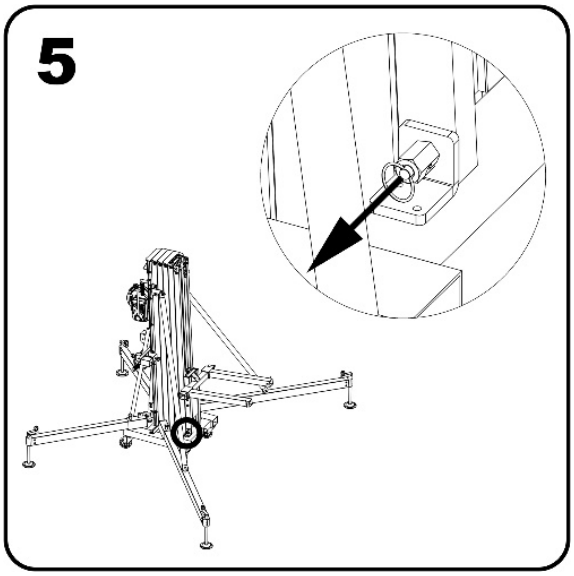

Figure 78

Unlock the security brake of the aluminium carrier

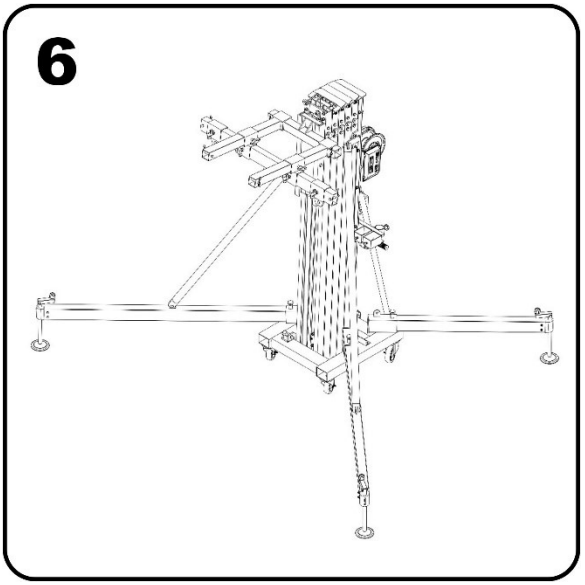

Figure 79

Place the accessory in the calculated position.

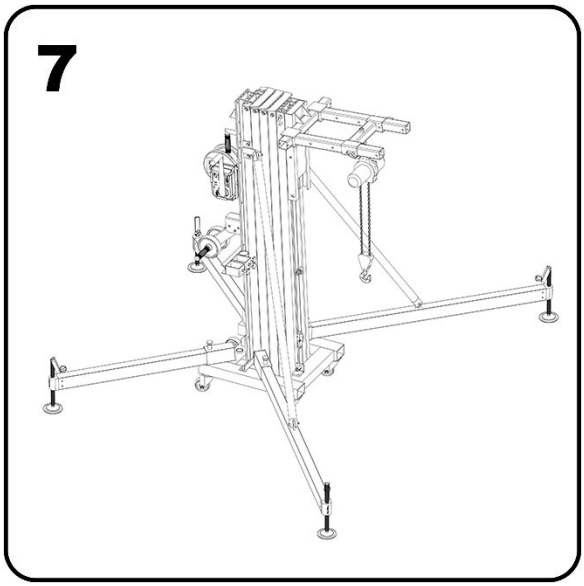

Figure 80

Join the truss system to the tower.

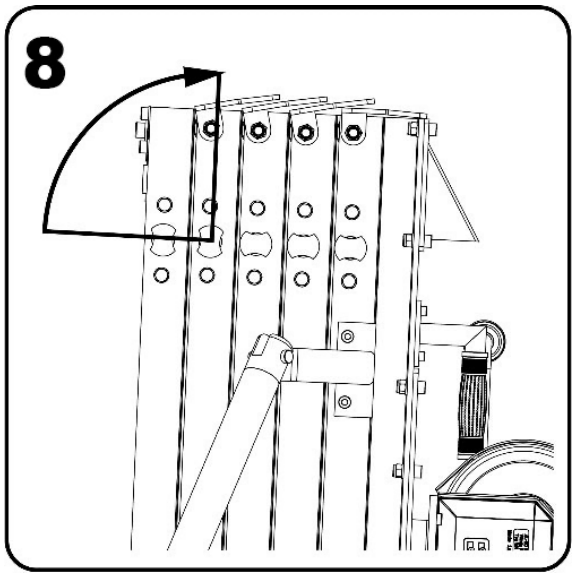

Figure 81

Unlock the mast safety system. Operate the winch handle to raise the load.

ATTENTION

IMPORTANT ¡!! FOR THIS PURPOSE, USE ONLY MANUAL HOISTS

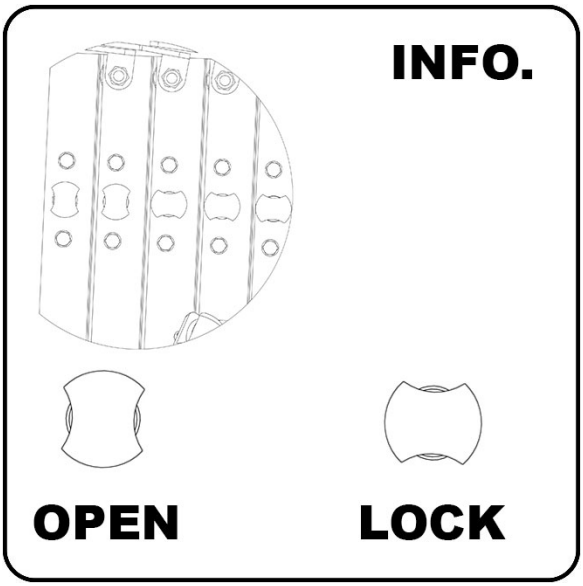

Figure 82

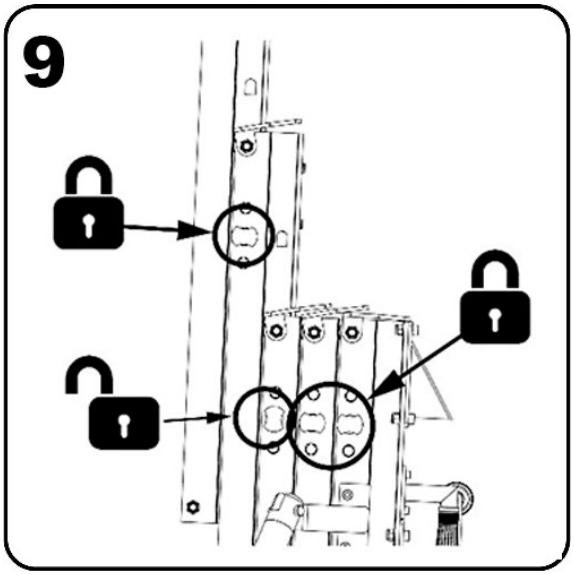

Figure 83

When the section reaches its end of path, lock with the safety system and unlock the next safety system to raise the next mast. Perform the same operation until you reach the required height.

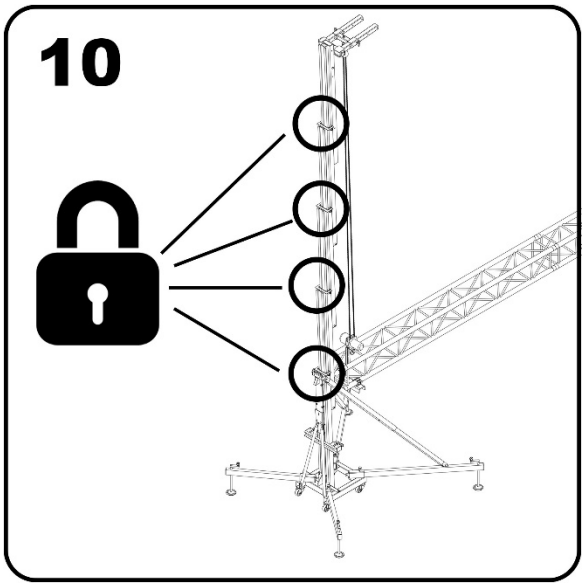

Figure 84

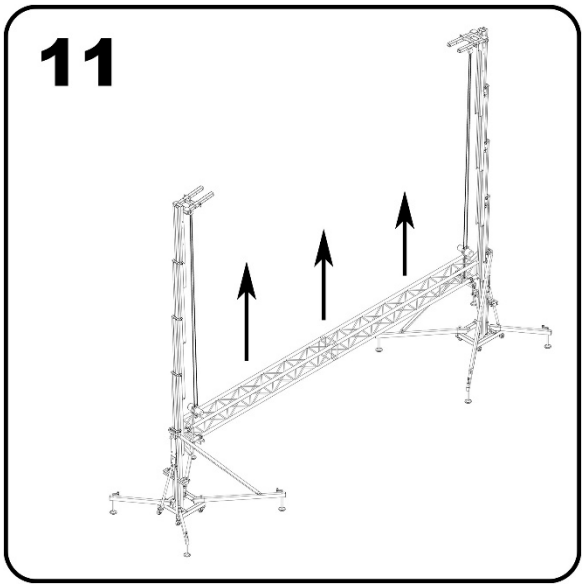

Figure 85

All safety systems must be in their locked position. Slack the cable from the winch so that the system is seated.

WARNING! The rate of rise and descend should be similar. If the structure rises or descend faster at one end, a destabilization of the entire facility can occur, causing a serious accident.

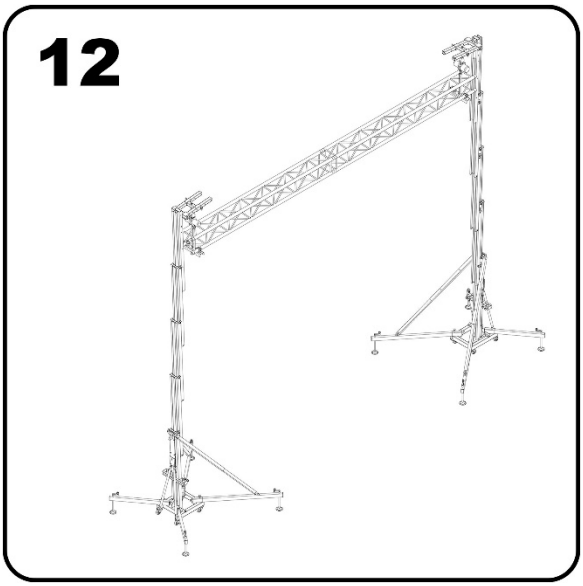

Figure 86

To descend the load. **Tense the cable and unlock the first security system**. Turn the winch while keeping the safety system unlocked with your other hand. If the safety system is not operated with one hand, the tower will descend until it is locked.

Once the load is descended, block all sections and follow steps 4 to 1 (in that order).

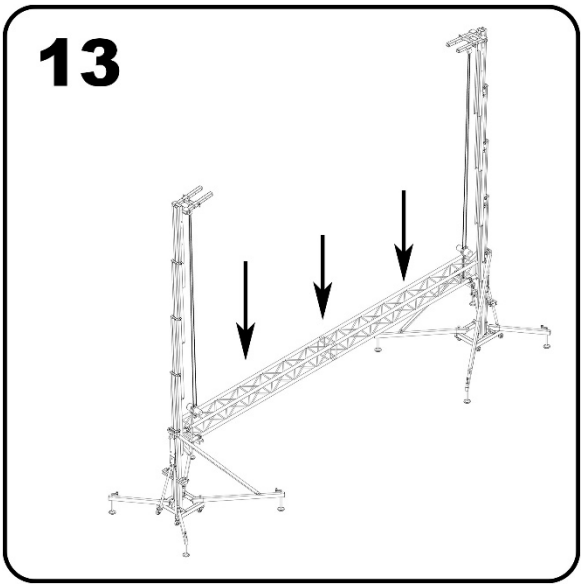

Figure 87

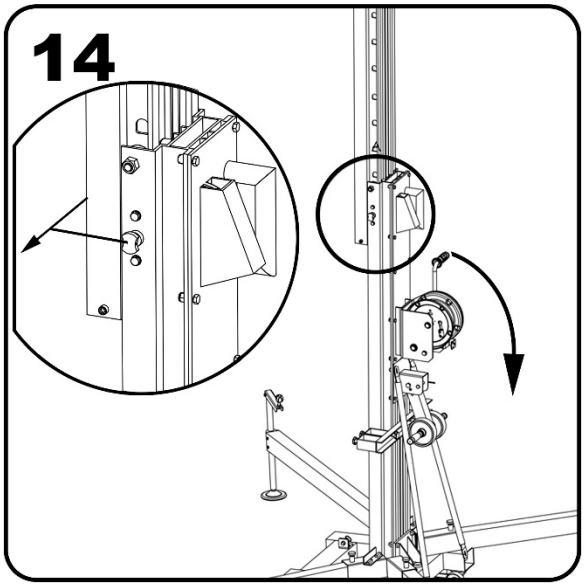

Figure 88

WARNING! If the tower is attempted to go down without tension in the cable and any of the safety systems are activated, a dangerous situation will occur because the load will descend very abruptly, being able to destabilize the whole installation and incurring in a serious accident.

IMPORTANT ¡!! FOR THIS PURPOSE, USE ONLY MANUAL HOISTS

USING THE TOWER IN STRUCTURE MODE (WIND CONDITION)

The towers used in the structure mode form a column type system that can withstand higher loads than the mechanism mode.
In order to be able to use the towers outdoors and subjected to bursts of wind, you should contact an engineer in the area or our technical department to study the case

In outdoor use many factors must be taken into account, the most important are:
- Wind gusts
- Total exposed area
- Working height
- Angle of the braces
- Weights and distance to the tower
- Rigging of all joints
- Etc …

As an operating guide, the towers involved in this manual can be used outdoors as long as they are in structural mode and the maximum loads are those of the mechanism mode.

This is because the loads transmitted by the winds are transmitted vertically from the tower to the ground, adding an overload that depends on several factors. This overload is added to the maximum load of the tower.

If it is not calculated in each specific case of use, it is possible to take as base the data contained in the load chart (figure 98) operating the tower as mechanism by security purpose.

ACCESSORIES

The FT series towers has the following accessories.

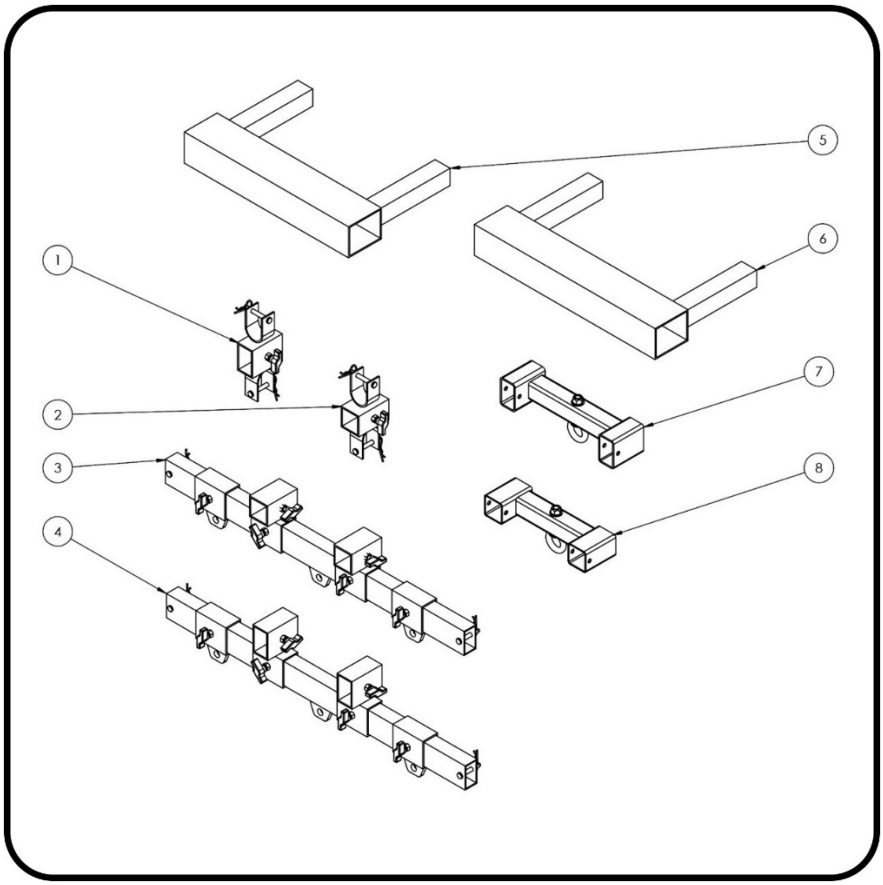

Figure 89

1	ATF2DS	**3**	ATF17PAM	**5**	ATFT200	**7**	ATF17PA
2	ATF1DS	**4**	ATF08PAM	**6**	ATFT600	**8**	ATF08PA

Figure 90

PART.	FT6860	FT7045	FT6033	FT6520	FT5323
ATF1DS			X	X	X
ATF2DS	X	X			
ATF17PA			X	X	X
ATF08PA	X	X			
ATFT200			X	X	X
ATFT600	X	X			
ATF17PAM			X	X	X
ATF08PAM	X	X			

Figure 91

PLACING THE LOAD

1. Determine the position where the load will be placed and consult the tower capacity. Never exceed.
2. The “X” distance between the load is taken from the carriage to the end of the horns.

3. When possible, place the load as close to the carriage as possible. This prolongs the life of the tower.

TOWER	X in P1 (mm / inch)	X in P2 (mm / inch)	X in P3 (mm / inch)	X in P4 (mm / inch)	X in P5 (mm / inch)
FT6860	85	270	450	635	820
	3.34	10.63	17.72	25	32.33
FT7045 / FT6033	100	260	425	580	
	3.93	10.23	16.73	22.83	
FT6520 / FT5323	95	225	355	485	
	3.74	8.85	13.97	19.1	

Figure 92

Detail of the position of all points of load.

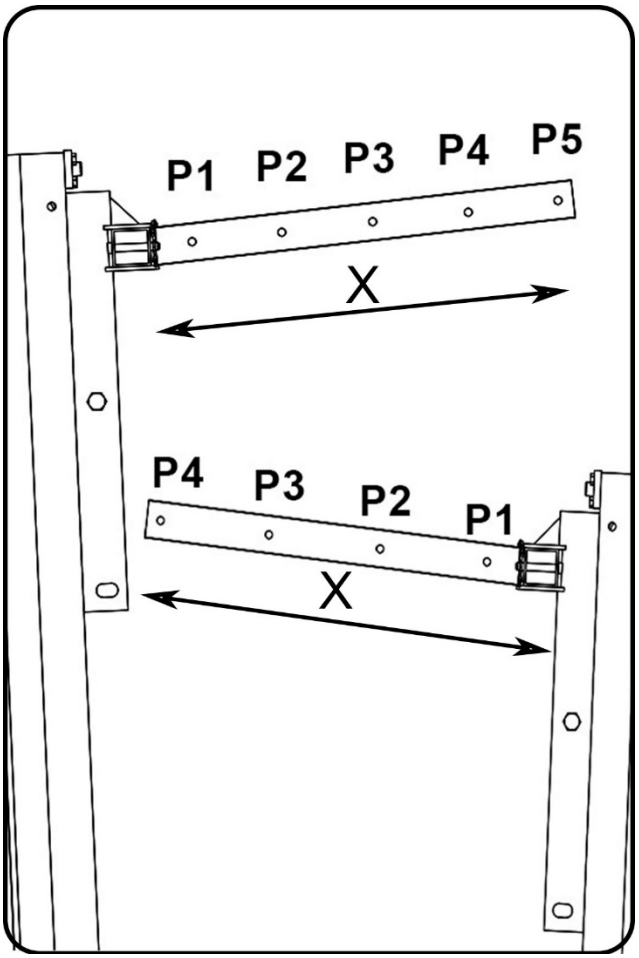

Figure 93

Detail of load positions.

LOAD CHART

The maximum loads supported by each tower model, for its maximum working height can be consulted below:

USING THE TOWER AS A MECHANISM.

The tower behaves like a machine when lifting a load making use of the winch as a lifting element. In this case all the parts of the tower behave like a mechanism that uses pulleys, cables and guides to be able to execute the elevation of a load at a certain height.

USING THE TOWER AS A STRUCTURE.

The tower behaves like a structure when all the sections are blocked in such a way that the cable is without tension. In this case the locking system together with the profiles, base and legs act as a support column from which loads can be hung using some support elements such as manual electric hoists.

		AS MECHANISM					AS STRUCTURE				
		P1	P2	P3	P4	P5	P1	P2	P3	P4	P5
FT-6860	lbs	1323	1257	1180	1113	1036	1885	1775	1609	1268	1036
	kg	600	570	535	505	470	855	805	730	575	470
FT-7045	lbs	992	849	705	562	X	1135	882	716	562	X
	kg	450	385	320	255	X	515	400	325	255	X
FT-6033	lbs	992	849	705	562	X	1135	882	716	562	X
	kg	450	385	320	255	X	515	400	325	255	X
FT-6520	lbs	441	436	432	428	X	794	771	617	485	X
	kg	200	198	196	194	X	360	350	280	220	X
FT-5323	lbs	518	496	474	452	X	1003	838	772	452	X
	kg	235	225	215	205	X	455	380	350	305	X

Figure 94

DYNAMIC OVERLAP

Thanks to the continuous development of new solutions for the lifting towers, FANTEK Industrial, has developed and patented an ingenious solution that increases the resistance of the towers and reduces the deflection of these. Dynamic Overlap makes each tower section overlap with the previous one at different distances. In the same way as a tree in nature. This means that all efforts are concentrated in the same way in all the sections of the tower. Thanks to this, the tower can withstand greater efforts with less deflection

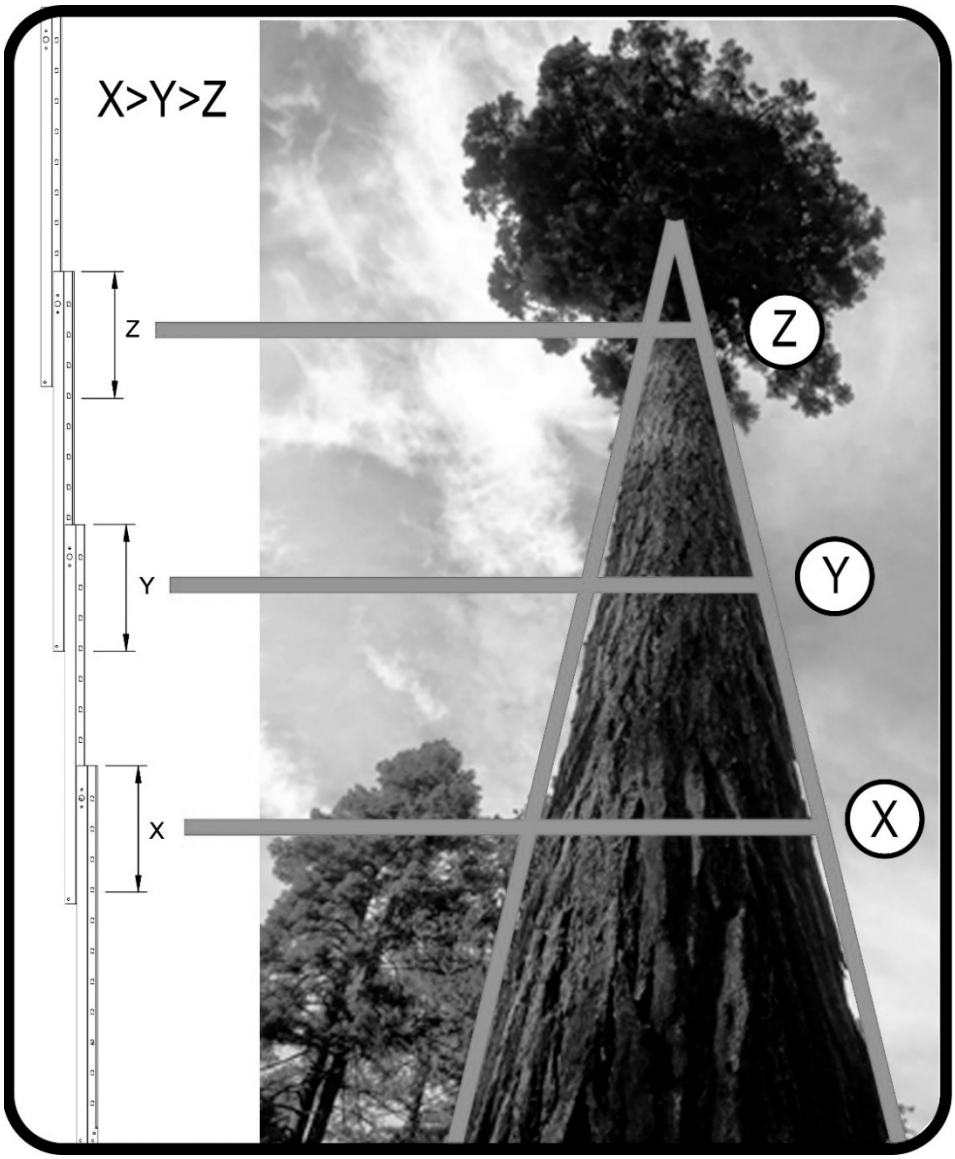

Figure 95

DGUV V17/18 NORM REGULATION. Explanation

DGUV V17/18 is a norm that regulates the stage and production elements in the entertainment industry. Lifting equipment and rigging are part of this norm and cover structures and other technical elements.

Adopt **DGUV V17/18** is totally voluntary (except in Germany) but its adoption is required by insurance companies and indeed is becoming a norm in the industry

The application of this norm on lifter towers is vital because, in theaters, stages, etc.., are used to move loads above artists, technical staff, etc... and in some cases, above viewers, representing a potential risk of fall.

NORM DGUV V17/18. Fields of application

This standard is oriented in two ways:

On the one hand, lifting towers adopt designs and materials to achieve a high degree of safety in quantities such as supported load, equilibrium, resistance to friction, etc.

Thus **FANTEK Industrial** lifter towers **DGUV V17/18** certified assure the user that they have passed strict controls during design, choice of materials or load checks and effort.

On the other hand, in order to achieve an optimal performance with these units, it is recommended, part from a responsible use of the unit, (meeting basic norms such as obey the maximum load or balance), a periodic maintenance, which must be carried out by expert technicians, checking the condition of the steel cable and winch, the functioning of the security pins and the folding/unfolding of all sections.

All the above tests are only mandatory in those countries with specific regulations on the matter, applied through regulations or laws. As manufacturers, we recommend passing all tests in order to prevent damage and ensure proper operation of P.A. lift systems.

SPECIFICATIONS

Model	FT-6860		FT-7045		FT-6033		FT-6520		FT-5323	
Height	1980	mm	1905	mm	1720	mm	1710	mm	1710	mm
	77,95	ft	6.25	ft	5,64	ft	5,61	ft	5,61	ft
Maximum height	6800	mm	7000	mm	6000	mm	6500	mm	5300	mm
	22,31	ft	23,21	ft	16,69	ft	21,33	ft	17,39	ft
Width	580	mm	520	mm	520	mm	440	mm	440	mm
	22,3	in	20,5	in	20,5	in	17,3	in	17,3	in
Length	900	mm	700	mm	700	mm	600	mm	600	mm
	35,3	in	27,6	in	27,6	in	23,6	in	23,6	in
Width- stabilizers lowered	2170	mm	2300	mm	2300	mm	1950	mm	1950	mm
	85,4	in	90,6	in	90,6	in	76,8	in	76,8	in
Length operating	1830	mm	1760	mm	1760	mm	1340	mm	1340	mm
	72,1	in	69,3	in	69,3	in	52,7	in	52,7	in
Ground clearance	50	mm	50	mm	50	mm	50	mm	50	mm
	1,97	in	1,97	in	1,97	in	1,97	in	1,97	in
Loading fork	945	mm	650	mm	650	mm	500	mm	500	mm
	37,20	in	25,59	in	25,59	in	19,65	in	19,65	in
Minimum load capacity	25	Kg	25	Kg	25	Kg	25	Kg	25	Kg
	55,12	Lb	55,12	Lb	55,12	Lb	55,12	Lb	55,12	Lb
Max. load as machine	600	Kg	450	Kg	450	Kg	200	Kg	235	Kg
	1322,8	Lb	992,1	Lb	992,1	Lb	440,9	Lb	518,1	Lb
Max. load as structure	855	Kg	515	Kg	515	Kg	360	Kg	455	Kg
	1885	Lb	1135	Lb	1135	Lb	793,6	Lb	1003,1	Lb
Net weight	255	Kg	165	Kg	156	Kg	112	Kg	101	Kg
	562,2	Lb	363,8	Lb	343,9	Lb	246,9	Lb	222,7	Lb
Winch	1200	Kg	900	Kg	900	Kg	1200	Kg	1200	Kg
	2645,5	Lb	1984,2	Lb	1984,2	Lb	2645,5	Lb	2645,5	Lb
Noise emissions	70	dB	70	dB	70	dB	71	dB	73	dB

Figure 96

DECLARACION DE CONFORMIDAD / *DECLARATION OF CONFORMITY*

Las torres elevadoras descritas cumplen con todos los requerimientos específicos en la directiva 2006/42/EC del Parlamento Europeo y del Consejo de 17 de mayo de 2006 relativo a la Directiva de máquinas.

The tower lifters described complies with all the specific requirements of Directive 2006/42 / EC of the European Parliament and of the Council of 17 May 2006 on the Machinery Directive.

Las torres elevadoras descritas cumplen con todos los requerimientos específicos en la DIN56950:1/3.

The tower lifters described meet all the specific requirements in DIN56950: 1/3.

Las torres elevadoras descritas cumplen con todos los requerimientos específicos en la DGUV V17/18

The tower lifters described meet all the specific requirements in DGUV V17/18

Fabricante / *Manufacturer:*	FANTEK INDUSTRIAL S.L.
Persona responsable de recopilar la información técnica ***Person responsible of the technical data:***	Jose Vila Ortiz
Dirección / *Address*:	Pol. Ind. El Bony. C/Del Port nº3. 46470 – Catarroja – Valencia (Spain)
Descripción / *Description*:	Frontal load lifter
MODELO / *MODEL* FT-6860	**MAX. LOAD:** 855 kg
MODELO / *MODEL* FT-7045	**MAX. LOAD:** 514 kg
MODELO / *MODEL* FT-6033	**MAX. LOAD:** 514 kg
MODELO / *MODEL* FT-6520	**MAX. LOAD:** 360 kg
MODELO / *MODEL* FT-6023	**MAX. LOAD:** 455 kg

Jose Vila Ortiz

DGUV MARK

NUMERO DE SERIE:	SERIAL NUMBER:	LAUFENDE NUMMER:

Primer test en fábrica	First test in factory.	Erstprüfung im Werk.

Fecha/Date/Datum	Testado por/Tested by/Prüfer

Examen a los cuatro años.	Four years test	UVV Prüfung (alle 4Jahre)

Fecha/Date/Datum	Testado por/Tested by/Prüfer

Examen anual a partir del cuarto año.	Annual test after the fourth year.	UVV Jährlicher Test nach dem vierten Jahr.

Fecha/Date/Datum	Testado por/Tested by/Prüfer
Fecha/Date/Datum	Testado por/Tested by/Prüfer
Fecha/Date/Datum	Testado por/Tested by/Prüfer
Fecha/Date/Datum	Testado por/Tested by/Prüfer

FANTEK®
INDUSTRIAL, S.L.

c/ Traginers, 14 . Pol. Ind. El Alter , 46290 - ALCACER
Valencia (SPAIN)
Tel. +34 96 126 01 68 - info@fantek.net